Fuller® Automated Transmissions

Roadranger® More time on the road®

Installation Guide

Fuller Automated Transmissions

TRIG0062

November 2007

RT-14910B-AS2
RTLO-14918A-AS2
RTLO-16918A-AS2
RTLO-18918A-AS2
RTLO-20918A-AS2
RTLO-22918A-AS2
RTO-10710B-AS2
RTO-10910B-AS2
RTO-12710B-AS2
RTO-12910B-AS2
RTO-14710B-AS2
RTO-14710C-AS2
RTO-14910B-AS2
RTO-14910C-AS2
RTO-16710C-AS2
RTO-16910B-AS2
RTO-16910C-AS2
RTO-18910B-AS2
FO-6406A-ASX
FO-8406A-ASX

This page intentionally left blank.

Introduction

Installation Requirements

Electrical Requirements

Features

Line Inspection

Appendix

How To Use This Manual

This Eaton publication is intended to be a reference guide for the installation of the Eaton AutoShift™ RTLO-xx918A-AS2, RTO-1x910x-AS2, TO-1x607x-ASX, and F0-x406A-ASX Eaton AutoShift™. General vehicle and transmission information is provided to cover the wide range of applications. This information benefits the OEM installer by providing the correct installation procedures to ensure the utmost in satisfactory operation and long service life. For additional transmission information, see the Suggested Tools section in the back of this manual. For specific engine information contact the engine OEM.

Failure to adhere to Eaton Installation Requirements may affect transmission performance and/or warranty coverage.

AutoShift are compatible with electronically governed engines equipped with a J-1939 data link and certified by Eaton Corporation. Transmissions installed at OEM facilities must meet and be approved by Eaton Application Engineering. Contact Eaton Application Engineering or your OEM Application Engineering department for proper Application form. All applications must be submitted for approval.

OEM facilities must submit a design package to Eaton Corporation OEM Engineering Support Group for approval prior to any OEM build. A design package consist of the following information.

Electrical Systems

Wiring Schematic: This should show how the AutoShift would interface with the vehicle.

Individual Harness Drawings: This should show the construction of each harness.

Harness Routings: This should show how each harness is routed in the vehicle. The locations of relays, fuses, power connections, tie-downs, etc.

Transmission Air Supply (if required)

Transmission Cooling System (if required)

Cooler size/type

Cooler line routing

Every effort has been made to ensure the accuracy of the information contained in this manual. However, Eaton Corporation makes no warranty, either expressed or implied, based on the information provided. With each new application, engine manufactures should be contacted to make sure desired engines are compatible with AutoShift systems.

Suggested Tools

Pressure Gauges

0-100 PSI Air Pressure Gauge

O.E. Tool & Equipment Group/Kent-Moore SPX Corporation 1(800) 520-2584

Kent-Moore Part no.	Description
5505027	Volt/Ohm Meter (Standard commercially available VOM)
5505030	Hydraulic Test Kit

Eaton Corporation OEM Engineering Support Group

TBD	Pull to Neutral Box

O.E. Tool & Equipment Group/Kent-Moore SPX Corporation 1(800) 328-6657

Kent-Moore Part no.	Description
J-43318	Eaton Test Adapter Kit
	MD-100

Eaton Service Parts 1 (800) 826-HELP (1-800-826-4357)

Part No.	Description
	MD-200

Related Publications

Troubleshooting Guide	Eaton TRTS-0062
Service Manual	Eaton TRSM-0062
Driver Instructions	Eaton TRDR-0062

For more information call 1-800-826-4357.

Requirements

Eaton AutoShift transmission systems installed at OEM facilities must meet the requirements and be approved using the Eaton Transmission Application Approval Form. Please contact Eaton Application Engineering or your OEM's Application department for the latest Application form.

1. **Space Requirements** - Eaton AutoShift transmission systems require a minimum of 5” (127 mm) clearance from any high temperature device (i.e. Exhaust Crossover Pipes, Catalytic Convertor) that generate heat at a maximum of 500° F. The systems to be avoided are the Shift Motors, Sensors, Wire Harness and Transmission Controller (see figure). * If you must deviate from this distance and temperature an Eaton approved heat shield must be used.
2. **Cab Floor Access Plate** - A cab floor access plate is necessary for access and removal of components from the transmission top. Plate size must be sufficient to allow removal of the transmission Controller or the Electric Shifter.
3. **Clutch Requirements** - Power assisted clutch release system is required for all rear engine coach applications. Adjustment free clutches are required for all 6, 7, 10, and 18-Speed applications.
4. **Lubrication Requirements** - Roadranger® CD50 or equivalent E500 synthetic as specified in Eaton publication TCMT-0021.
5. **Electrical Wiring Requirements** - It is the OEM responsibility to provide power and ground to the Transmission Controller from a reliable battery source. The power (+) connection must include overload protection per Federal Motor Carrier Safety Regulations, Section 393.31 Main Power and Ground must be able to carry 20 amps @ 9 volts with no more than.05 ohms from the battery source.

   - The cable outside the cab shall be a minimum of 16 gauge(1.0 mm^2). The cable inside the cab shall be a minimum of 18 gauge(0.8 mm^2).
   - When the Eaton Push Button Shift Control is used the EPL (the communications link between the Shift Control and the Transmission Controller) must be a twisted pair; Belden, J-1939, or equivalent.
   - The J-1939 (the communications link between the Transmission ECU and the Engine Controller ECM) must follow SAE J-1939 specifications.
   - The SAE J-1587 connector must be easily accessible and mounted on the left side of the cab.
6. **Harneesses** - Do not splice any transmission harness to supply another system with information. Using the cabling for any purpose other than transmission control could cause a system failure.
7. **Power-Battery** - (+) and (-) must be disconnected PRIOR to any type of welding on any Eaton AutoShift equipped vehicles.
8. **Speedometers** - No mechanical speedometers.
9. **Line Inspection** - Prior to shipment of Eaton transmission systems installed at OEM plants, the transmission must pass the requirements outlined on the checklist form. See the Line Inspection section in this manual.
10. **Oil Cooler** - Eaton approved oil cooler required for all 18-Speed transmissions .
    On other transmissions, an oil cooler is required:

    - With engines 400 H.P. and above, and GCW’s over 90,000Lbs.

    - With engines 400 H.P. and above, and 1400 Lb.ft or greater torque.

    - With engines 450 H.P. and above.

    - With engines 1500 Lb.ft and above

11. Application of more than 36 volts to the system (such as jump starting) will cause system shutdown and possible electrical component damage.
12. **Engine Retarder** - 10 and 18-speed transmissions require an engine retarder. When using an exhaust brake, the recommended practice is the exhaust brake on/off switches be wired into the engine ECM separately from the exhaust brake solenoid. Failure to comply with this recommended practice can cause Eaton AutoShift transmissions to miss shifts when the exhaust brake is required. For more information contact Eaton Application Engineering and refer to J1939 Engine Requirements for Eaton Automated Transmissions.
13. **Lifting Eyes and Sensor Position** - Bolts used for retaining sensors or lifting eyes are not to be used for any other purposes or have any other brackets attached to them.
14. **Air Dryer Requirements** - A high quality vehicle air dryer is required to be used with the 10 and 18-Speed AutoShift transmissions.
15. **Fan Drive Requirements** - The recommended practice is for the engine fan to be wired into the engine ECM, this includes the manual fan override switch. The OEM should use fan clutches that can be controlled by the engine (i.e. electromechanical). Failure to comply with this recommended practice can cause Eaton transmissions to inhibit shifts when the engine fan is on.

16. **Engine Configuration** - Prior to shipment of Eaton Transmission Systems installed at the OEM plants, the engine ECU must contain the proper configuration settings. For the proper engine configuration settings requiredfor Eaton Transmission operation, conatct Eaton OEM Engineering Support Group.

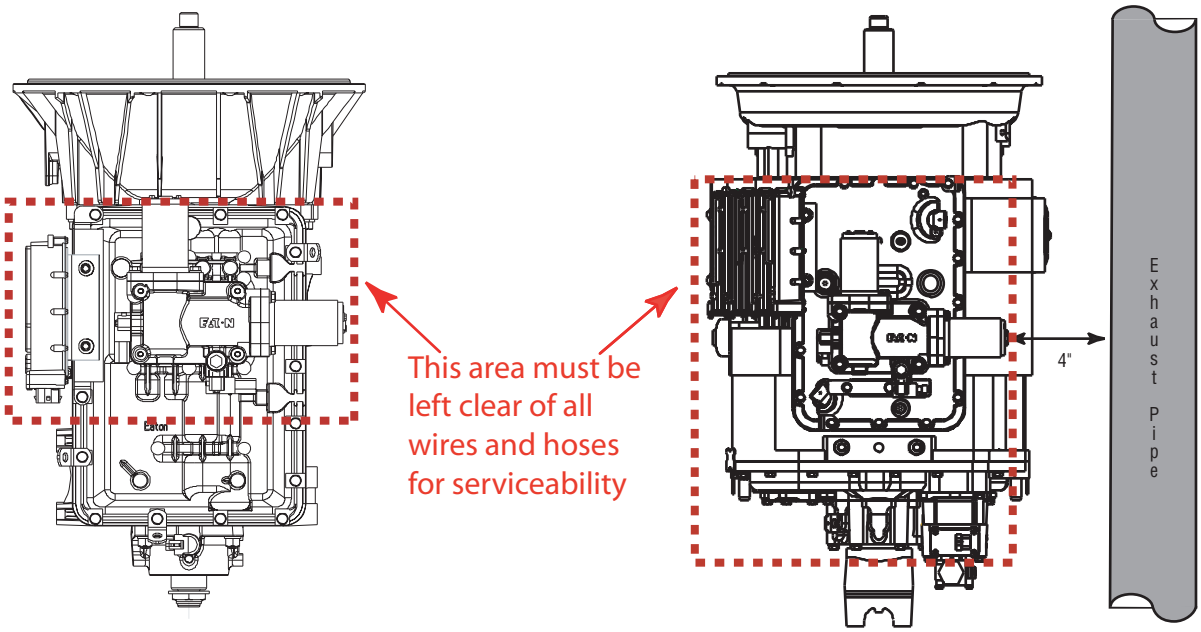

6-Speed FO-x406A-ASX

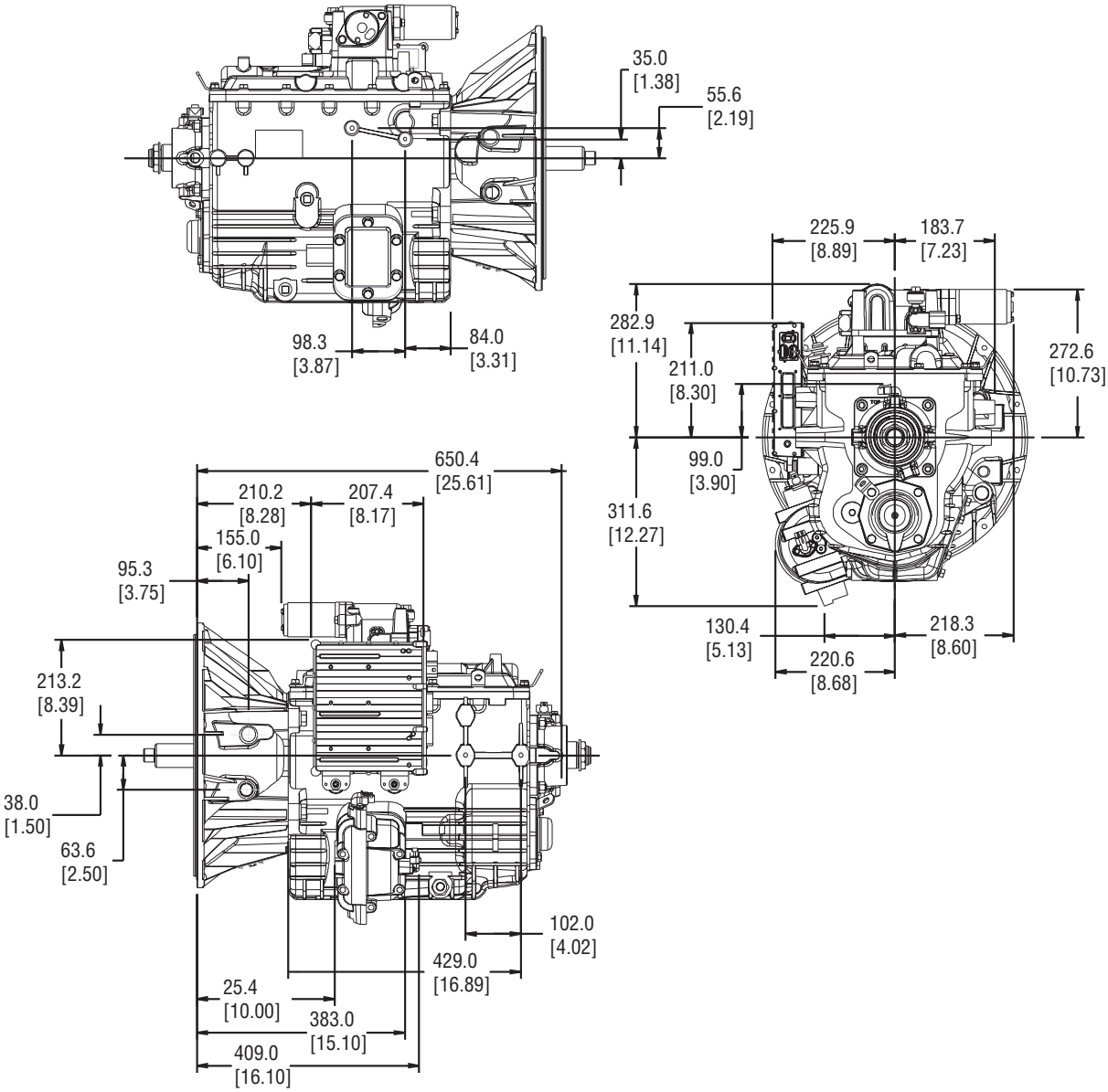

7-Speed TO-1x607B-ASX

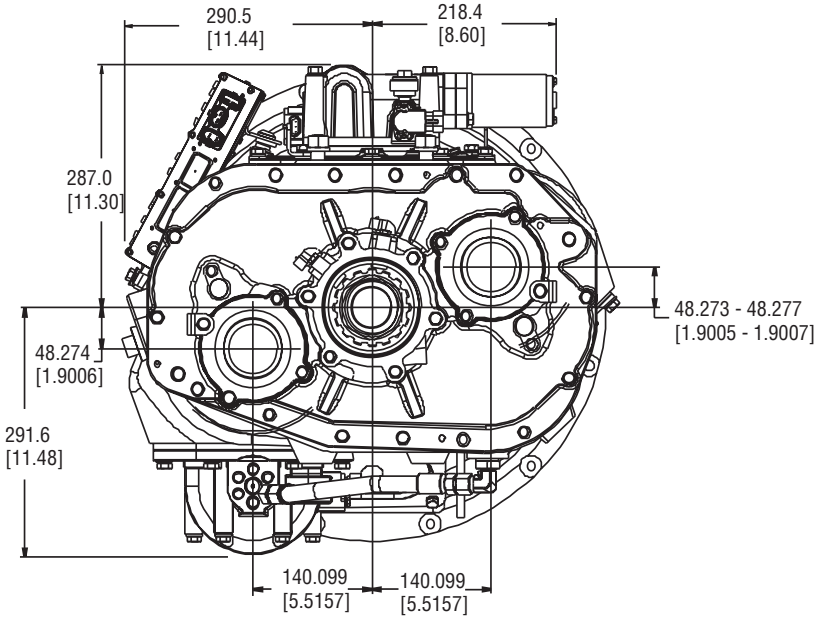

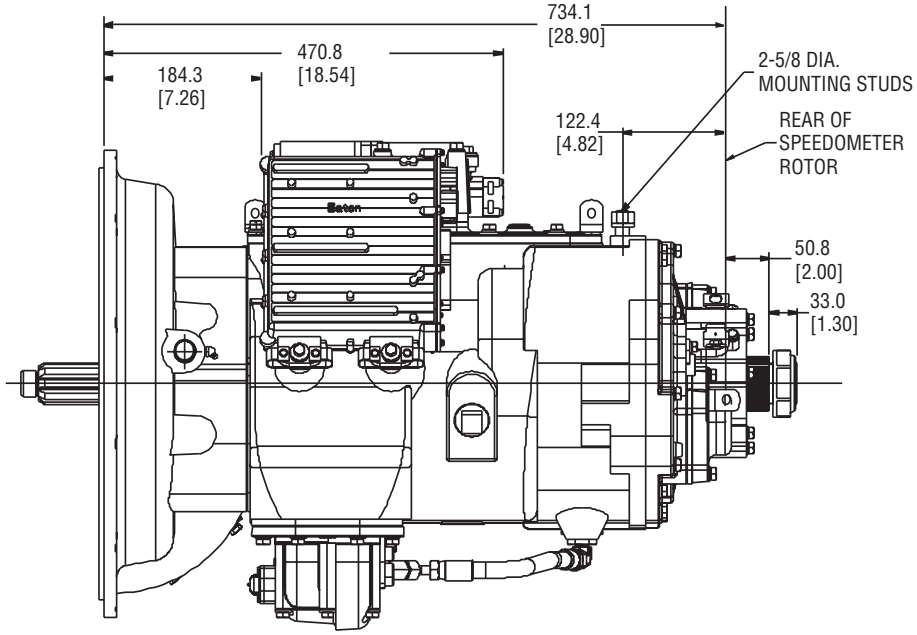

10-Speed RTO-1x910B/C-AS2

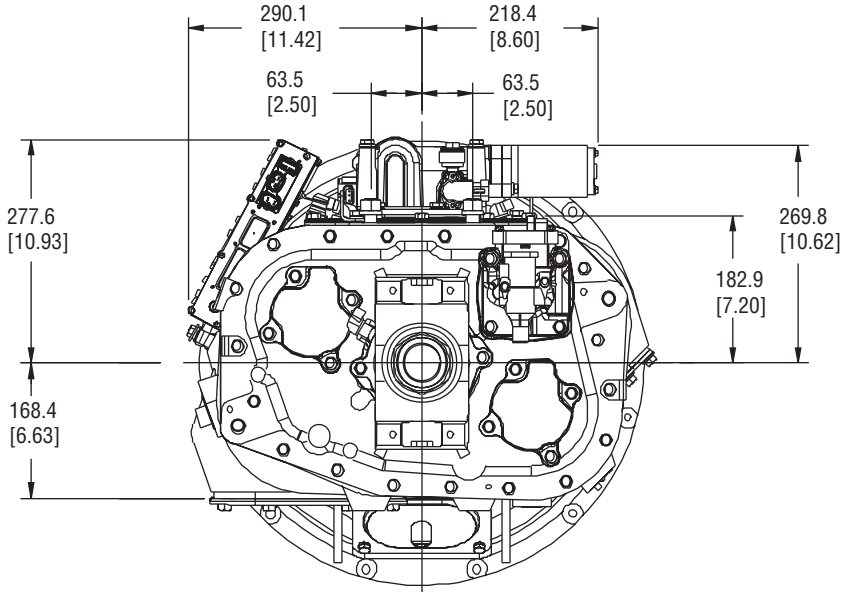

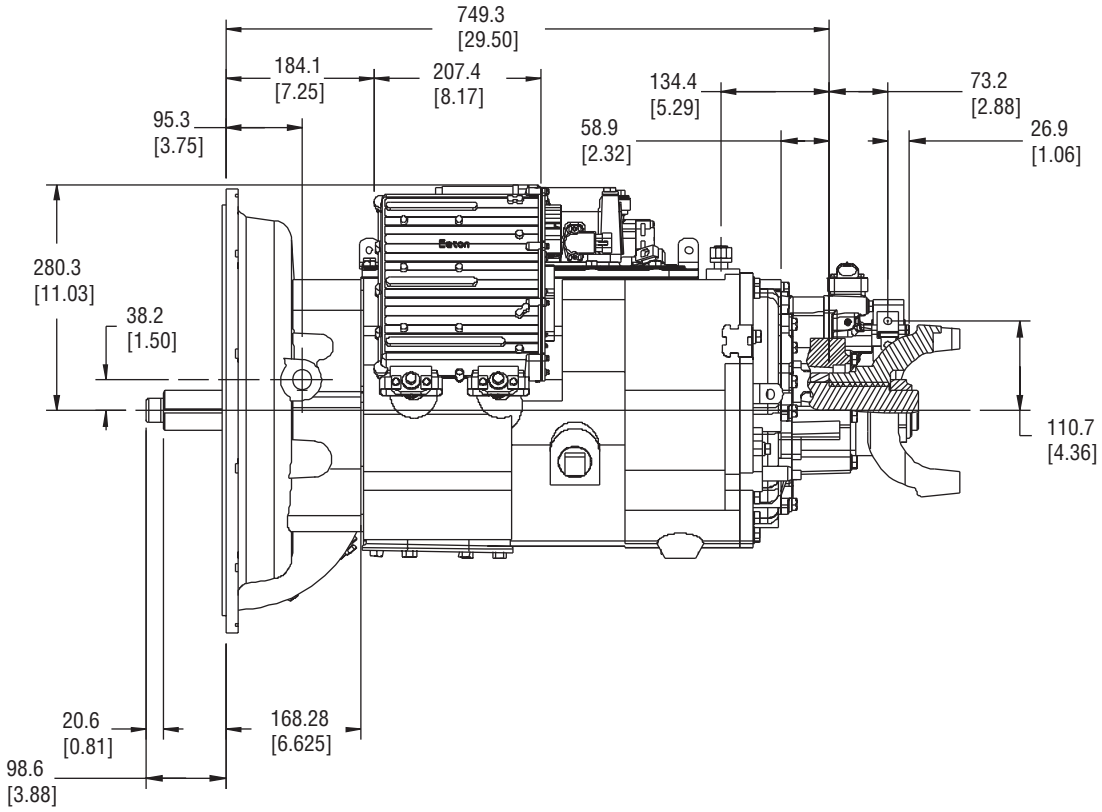

18-Speed RTLO-xx918A-AS2

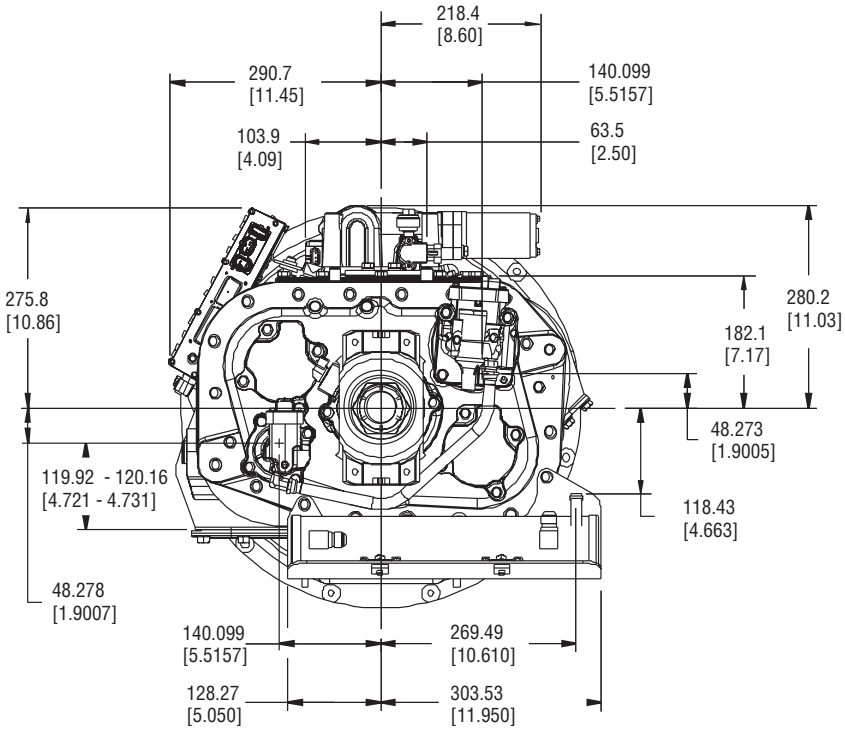

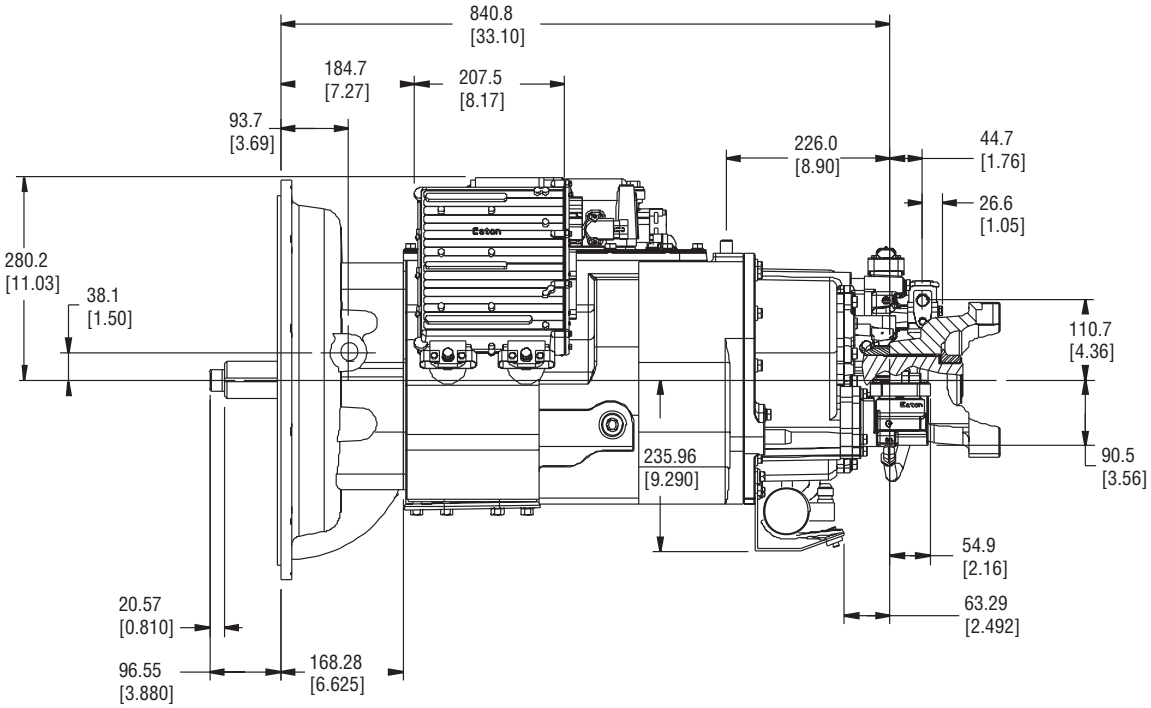

6-Speed Mounting

Handling

1. Handle the transmission carefully to avoid damage to the transmission components and surrounding vehicle components.

2. Use a hoist or transmission jack that permits precise control of transmission movement during installation.

Transmission Preparations

Always remove banding and protective wrapping from the transmission and inspect for shipping damage as soon as possible upon receiving.

3. If a push-in electronic speedometer system is used, Eaton P/N 14142 (O-ring) and Eaton P/N 71206 (silicon lubricant) are used to seal the sensor.

4. To remove, reposition, or replace rear bearing cover, refer to TRSM-0110 for instructions.

5. To install replacement main shaft output seal (Eaton P/N 20807) and slinger (Eaton P/N 20808) use Eaton installation tool (K-2091).

Output Yoke Installation

Note: The output yoke/flange is supplied with the transmission. If the output Yoke/flange must be replaced, the following procedure should be followed. (For detailed instructions, refer to the proper service manual for transmission model.)

Select the proper output yoke per specified application, remove plastic cover, and inspect the seal surface for damage or contamination. Do not use the yoke if the seal surface is damaged such as dents, nicks, or scratches.

6. Prior to installation, remove all contamination such as styrofoam particles, dust, dirt, or rust in the machined surface of the yoke.

7. Place the yoke over the transmission output shaft end and rotate it to line up the splines. Take care not to bump any machined surface of the yoke against the output shaft. Push the yoke all the way onto the output shaft and onto the seal with one continuous motion.

8. Thread the tail shaft nut onto the tailshaft until nylon insert is engaged on the tailshaft thread. Secure yoke and tighten the tailshaft nut to 300-350 lbs-ft [407-475 Nm].

7, 10 and 18-Speed Mounting

Handling

Handle the transmission carefully to avoid damage to the transmission components and surrounding vehicle components.

1. Use a hoist or transmission jack that permits precise control of transmission movement during installation.

Transmission Preparations

Always remove banding and protective wrapping from the transmission and inspect for shipping damage as soon as possible upon receiving.

2. If a thread-in electronic speedometer system is used, Eaton P/N 4301954 (seal) is used to seal the threads. Tighten sensor or sensor lock nut to 35 lbs- ft [47 Nm], (3/4-16 threads)If a push-in electronic speedometer system is used, Eaton P/N 14142 (O-ring) and Eaton P/N 71206 (silicon lubricant) are used to seal the sensor.. If a push-in electronic speedometer system is used, Eaton P/N 14142 (O-ring) and Eaton P/N 71206 (silicon lubricant) are used to seal the sensor.
3. To remove, reposition, or replace rear bearing cover, always replace nylon sealing collar (Eaton P/N 19709) and brass washer (Eaton P/N 20807) on the capscrew located at the chamfered hole in the rear bearing cover. Aapply Eaton Sealant P/N 71205 or equivalent to threads and tighten main shaft rear bearing cover capscrews to 35-45 lbs-ft [47-61 Nm] (3/8-16).

4. 7 and 10-Speed Only

5. To install replacement main shaft output seal (Eaton P/N 20807) and slinger (Eaton P/N 20808) use Eaton installation tool (K-2091)

6. 18-Speed Only

7. To install replacement main shaft output seal (Eaton P/N 4302322) and slinger (Eaton P/N 4302323) use Eaton installation tool kit (TCMT-0912)

Output Yoke/Flange Installation

Note: The output yoke/flange is supplied with the transmission. If the output Yoke/flange must be replaced, the following procedure should be followed. (For detailed instructions, refer to the proper transmission model service manual.)

Select the proper output yoke per specified application, remove plastic cover, and inspect the slinger (gold anodized ring) and seal surface for damage or contamination. Do not use the yoke/flange if the slinger or seal surface is damaged such as dents, nicks, or scratches.

8. Prior to installation, remove all contamination such as Styrofoam particles, dust, dirt, or rust in the machined surface of the yoke/flange.
9. Place the yoke/flange over the transmission output shaft end and rotate it to line up the splines. Take care not to bump any machined surface of the yoke/flange against the output shaft. Push the yoke all the way onto the output shaft and onto the seal with one continuous motion.
10. Thread the tail shaft nut onto the tailshaft until nylon insert is engaged on the tailshaft thread. Secure yoke/flange and tighten the tailshaft nut to 450-500 lbs-ft [610-678 Nm].

Mounting Transmission to Engine

Use the two transmission lifting eyes provided. The lifting eye position must not be changed on the transmission. Do not remove the Electric Shifter (X-Y Shifter) at any time.

Note: For lifting eye and sensor retaining bolt locations, see Appendix. These bolts can not be used for brackets or for any other purpose.

1. Use a two point lift chain or transmission jack with a minimum capacity of 1500 lbs.
2. Inspect the engine to transmission mating surfaces for damage or debris prior to installation. Make sure engine flywheel housing face, transmission clutch housing face, input shaft, etc. are free of paint, debris, rust, and any type of damage before installation.
3. Input Shaft To Clutch Alignment: The transmission is shipped from Eaton with the transmission in gear. The transmission must be in gear in order to rotate the input shaft by turning the output shaft/yoke. The transmission will automatically reset to the neutral position as soon as the vehicle is powered up (key switched on). In the event that the transmission is not received in gear, the input shaft will have to be manually indexed to mate up with the clutch splines.

Note: DRIVE SHAFT INSTALLATION- since the transmission is in gear until the vehicle is powered up with the key switch, use a pull to neutral box to disengage the transmission or rotate the axles to align the transmission prop shaft.

4. Adjust the lift chain or transmission jack to obtain the same relative angle as the engine. The face of the engine flywheel housing and the face of the transmission clutch housing must be parallel during installation. If the transmission is properly aligned and the clutch is installed properly, very little force is required to slide the input shaft through the clutch and into the pilot bearing.
5. If interference is encountered, move the transmission away from the engine to investigate the cause. The use of excessive force to overcome misalignment may cause damage to the transmission input shaft and the clutch.
6. Rotate the output shaft/yoke while sliding the input shaft into the clutch to line up the splines. Position the clutch release mechanism into proper position according to style used.
7. Once the transmission is seated against the engine flywheel housing, align the clutch housing bolt holes with the engine flywheel housing bolt holes and install all capscrews and tighten finger tight.

Note: The clutch housing must be flush against the engine flywheel housing before tightening any capscrews. Do not use the capscrews to seat housing.

8. Tighten four capscrews at 90° intervals around the clutch housing, then tighten the remaining transmission mounting capscrews using the recommended torque specifications.

Note: Do not tighten any mounting capscrews until all capscrews have been installed and finger tightened. Do not remove the transmission support chain or jack until all mounting bolts have been tightened.

Using Rear Supports

A rear support is required for all installations where the nodal mount supports are not used. The OEM is responsible for this design.

1. The transmission nodal mounting pads are approved to be used as a rear engine support location.
2. The OEM is responsible for nodal mount design.
3. Torque transmission nodal mount capscrews (3/4-10 UNC) to 180-190 lbs-ft. [224-258Nm] of torque.

Typical Rear Support Designs

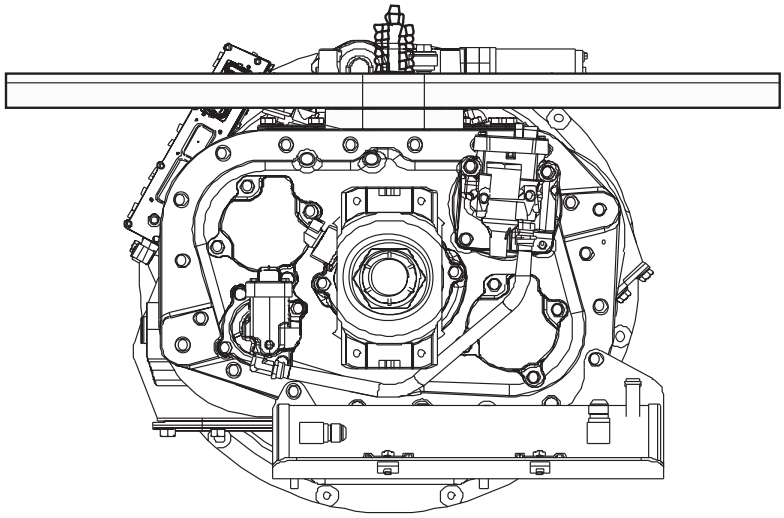

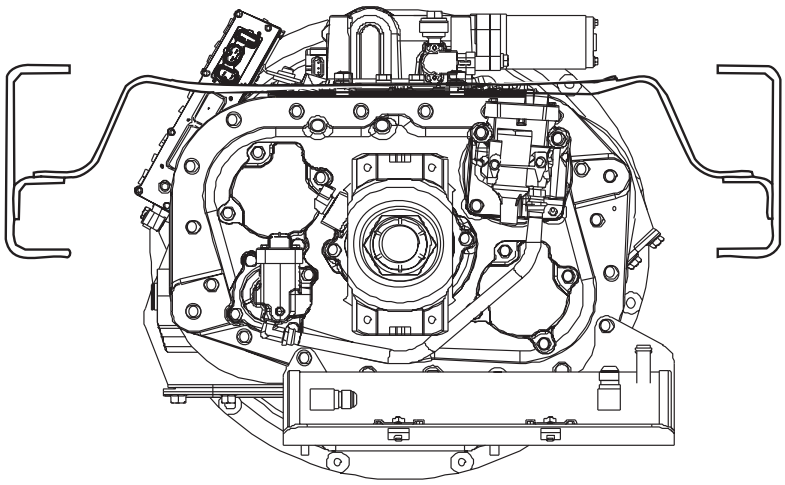

Lubrication Requirements

Eaton Fuller transmissions are designed so the internal parts operate in a bath of lubricant circulated by the motion of gears and shafts. Thus, all parts will be amply lubricated if these procedures are closely followed:

- Use Roadranger® CD50 or equivalent E500 synthetic per Eaton publication TCMT-0021.
- When adding lubricant, types and brands of lubricant should not be mixed because of possible incompatibility.
- Use clean lubricant and clean containers when filling the transmission. Containers that have been used for antifreeze or water should not be used for transmission lubricant.
- Additives and friction modifiers are not recommended for use in Eaton Fuller transmissions.

Recommended Lubricant

Type	Grade (SAE)	Temperature
Roadranger CD50 Transmission Fluid	50	ALL

Includes all Eaton approved comparable synthetic lubricant.

Proper Lubricant Level

Transmission Capacity

6-Speed	20.75 pints (9.8 liters)
10-Speed	26 pints (12.3 liters)
18-Speed	28 pints (13.2 liters)

Note: Failure to adhere to Eaton Installation Requirements may effect transmission performance and /or warranty coverage.

Note: The quantity for proper fill level will vary from unit to unit.

Make sure lubricant is level with fill hole opening. Because you can reach lubricant with your finger does not mean lubricant is at the proper level. (On heavy duty transmissions, one inch of lubricant level equals about 8 pints of oil).

DO NOT remove the Electric Shifter (X-Y Shifter) at any time.

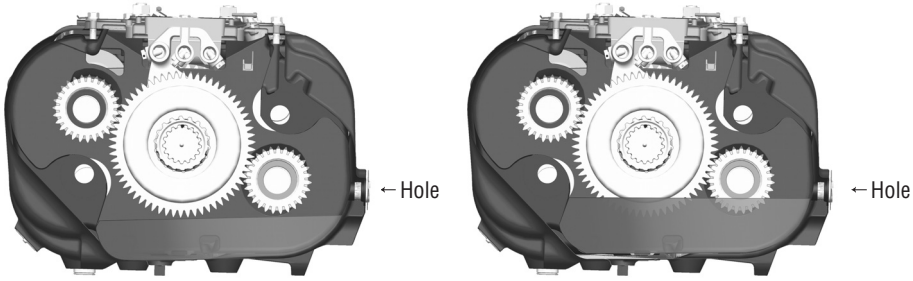

Improper Oil Level

Proper Oil Level

Lubrication Requirements

Operating Temperatures with Oil Coolers

Operating at temperatures above 250°F (121°C) causes loaded gear tooth temperatures to exceed 350°F (177°C) which will ultimately destroy the heat treatment of the gears. Temperatures above 250°F (121°C) should be regarded as a warning of inadequate cooling. If the elevated temperature is associated with unusual operating conditions that will reoccur, a cooler should be added, or the capacity of the existing cooling system increased.

The following conditions in any combination can cause operating temperatures of over 250°F (121°C):

- Operating consistently at slow speeds
- High ambient temperatures
- Restricted air flow around the transmission
- Exhaust system too close to the transmission
- High horsepower operation
- Engine retarders

External oil coolers are available to reduce operating temperatures when the above conditions are encountered.

Oil cooler systems must meet a minimum requirement of 3/4 I.D. cooler lines and 8 GPM system flow @ 1500 RPM. The end user is ultimately responsible for maintaining transmission lube temperatures below 250°F (121°C).

Transmission Oil Coolers are recommended	Transmission Oil Coolers are required
With engines of 350 H.P. and above	With engines 400 H.P. and above and GCW's of 90,000 lbs [40,823 kg] or greater
	With engines 400 H.P. and above and 1400 lbs-ft [1898 Nm] or greater torque
	With engines 450 H.P. and above
	With engines 1500 lbs-ft [2033 Nm] and above

Lubrication Requirements

Proper Lubrication Levels as Related to Transmission Installation Angles

If the transmission operating angle is more than 12 degrees, improper lubrication can occur. The operating angle is the transmission mounting angle in the chassis plus the percent of upgrade (expressed in degrees).

For example: If you have a 4 degree transmission mounting angle, then 8 degrees (or 14 percent of grade) is equal to the limit of 12 degrees. If you have a 0 degree mounting angle, the transmission can be operated on a 12 degree (21 percent) grade.

Note: The chart shows the effect a lubricant level 1/2” below normal can have on safe operating angles. Operating the vehicle 1/2” low on lubricant reduces the safe degree of grade by approximately 3 degrees (5.5 percent).

Proper Lubrication Levels are Essential!

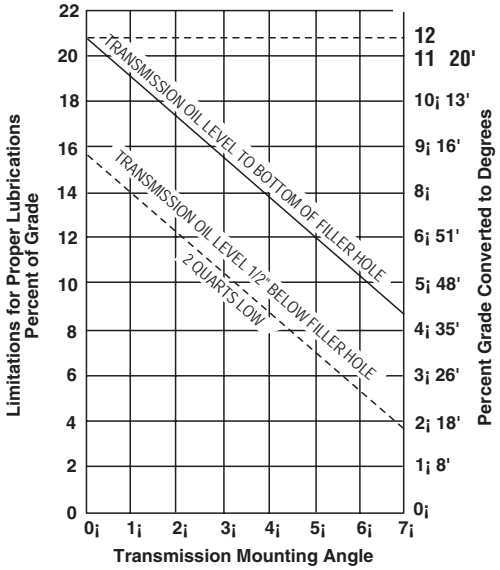

Dotted line showing "2 Quarts Low" is for reference only. Not recommended

Note: For transmission’s with cooler’s installed, make sure lubricant is level with fill hole opening, run the truck, stop and check lubricant level. Lubricant must be level with fill hole.

Air Supply Requirements for 10 & 18 Speed Transmissions

1. It is required to use a high quality commercially available air dryer in the air supply line before the transmission.
2. Minimum air requirement for the transmission is 65 PSI.
3. A minimum of 1/4” diameter air supply line is required.
4. The transmission air supply is required to be routed from the air tank, which supplies air to either the front or rear vehicle service brakes, with a gauge indicator in the cab.
5. Transmission airlines should not be routed or attached at the bottom air tank fittings to avoid any chances of introducing moisture into the airline.
6. Care should be used when routing the air supply to avoid kinks and close contact to heat sources.
7. The transmission air supply must be connected to the air filter/regulator mounted on the range cylinder cover.

Note: The air filter/regulator must not be removed during installation.

8. Air additives such, as alcohol devices should not be permitted to enter the transmission air supply. Additives could cause damage to air system components, which could lead to degraded transmission performance.

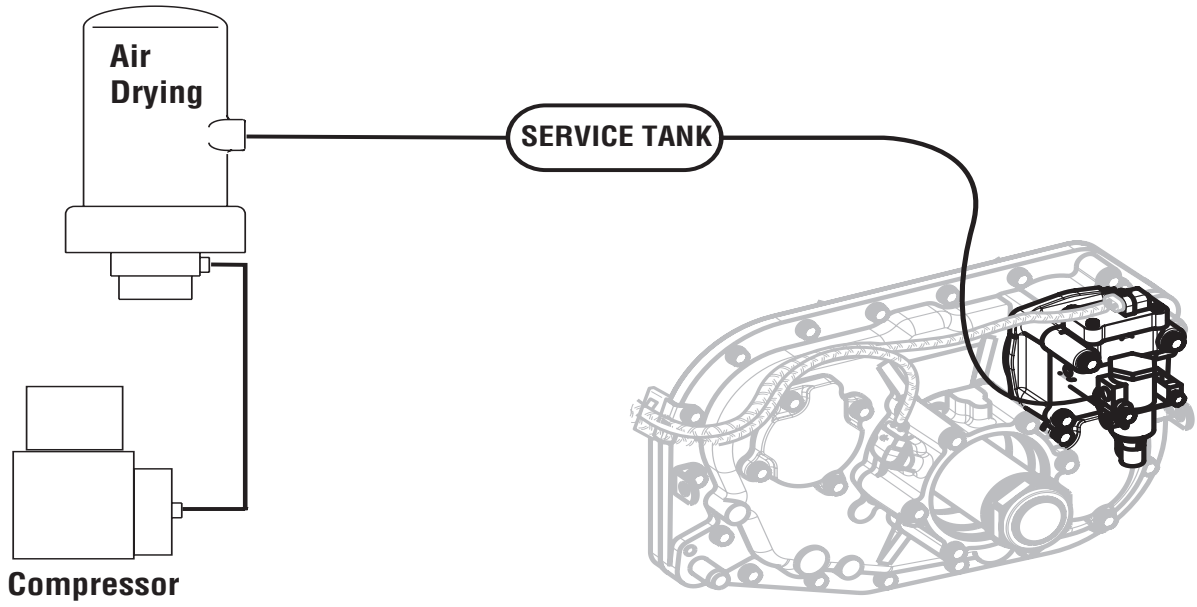

**DO NOT TIE WRAP AIR LINE
TO WIRE HARNESS ON TRANSMISSION**

Engine Retarder Requirements

An engine retarder (compression or exhaust) is required on AutoShift 10 and 18-Speed and transmissions, unless an optional Inertia Brake is used to aid in shifting performance of the Eaton AutoShift transmission.

1. The transmission sends J-1939 Torque/Speed Control 1 (TSC1) torque control commands to the engine retarder (compression or exhaust) only when deceleration assistance during a shift is required. The transmission automatically detects the retarder source address (compression or exhaust) and addresses the TSC1 accordingly. If both compression and exhaust are present, the transmission will address exhaust only.
2. The engine retarder shall respond to TSC1 control commands as indicated by Actual Retarder Percent torque within 50 msec of the TSC1 command.
3. The engine retarder shall respond to TSC1 commands regardless of the status of the engine brake control switches on the dash.
4. The engine retarder shall affect the engine deceleration rate within 250 msec to 300 msec of the request. Longer response times will adversely affect the transmission's upshift capabilities on a grade and may limit applications to grades 8% and lower. Response times greater the 500 msec are not acceptable.
5. The engine retarder shall respond to zero percent torque control command by turning off the engine brake within 250 msec. Longer delay times to turn off may cause harsh gear engagements and loss of vehicle speed.
6. The engine shall have a minimum deceleration rate of 1000 rpm/sec with the engine retarder at 100%. The engine is disengaged from the driveline and is virtually unloaded.
7. The recommended practice is for the exhaust brake on/off switches to be wired in the engine ECM separately from the exhaust brake solenoid. Failure to comply with this recommended practice can cause Eaton AutoShift transmissions to miss shifts when the exhaust brake is required. For more information contact Eaton Application Engineering and refer to J1939 Engine Requirements for Eaton Automated Transmissions.

Shift Console Space Requirements

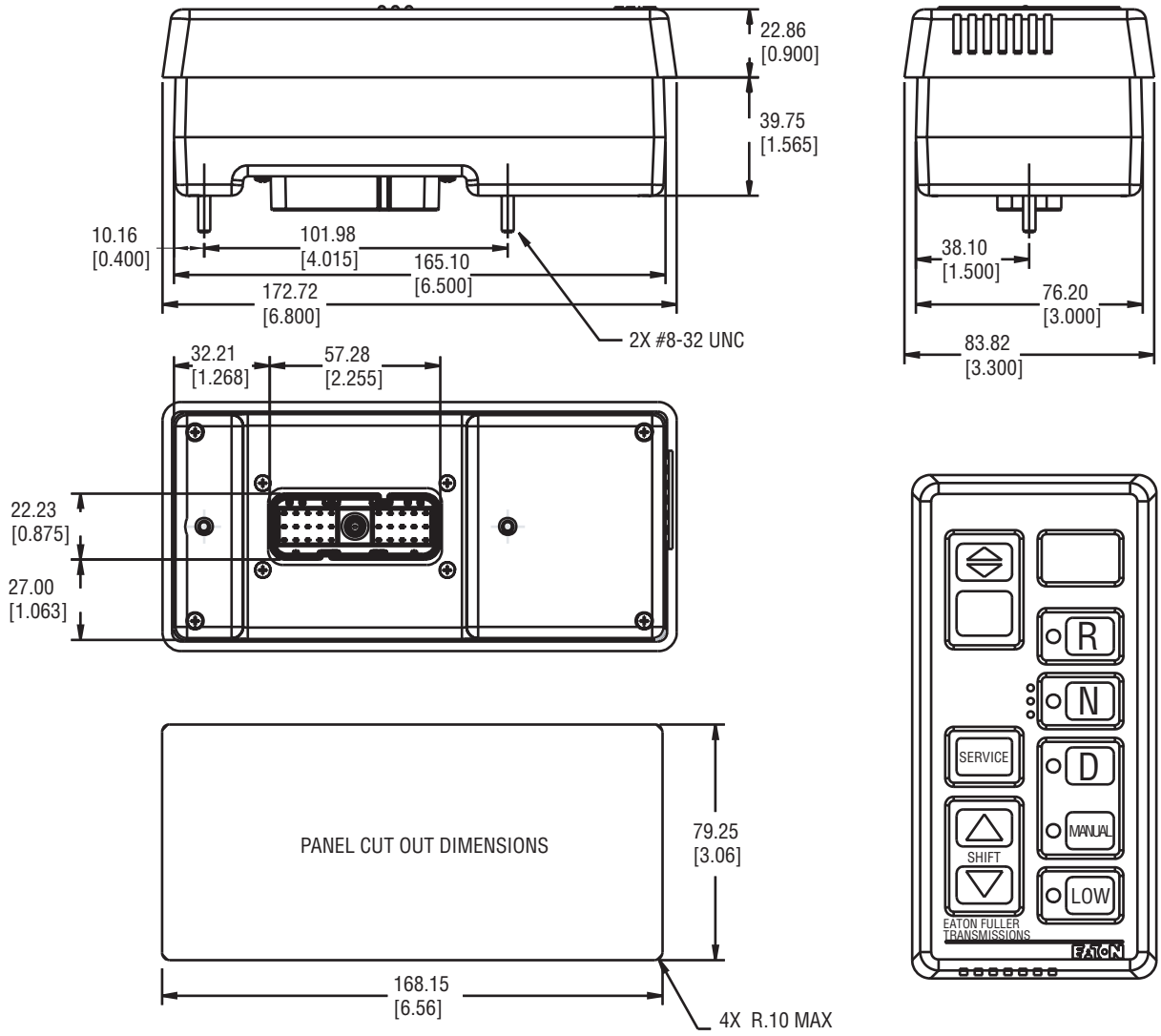

Mating Connector Information

1. Packard 30-way
2. Body 12048455
3. Terminal 12103881

Typical Dash Mount Configuration

1. Sealed bulkhead style harness connectors must be used when running harness connections through cab floor or firewall.
2. The shift console should be mounted to the dash using an OEM supplied mounting bezel. If no bezel is used, the OEM must ensure the Shift Control is accessible to the driver at all times.
3. A cab floor transmission access plate is necessary to service components on the top of the transmission. See “Requirements” on page 3.

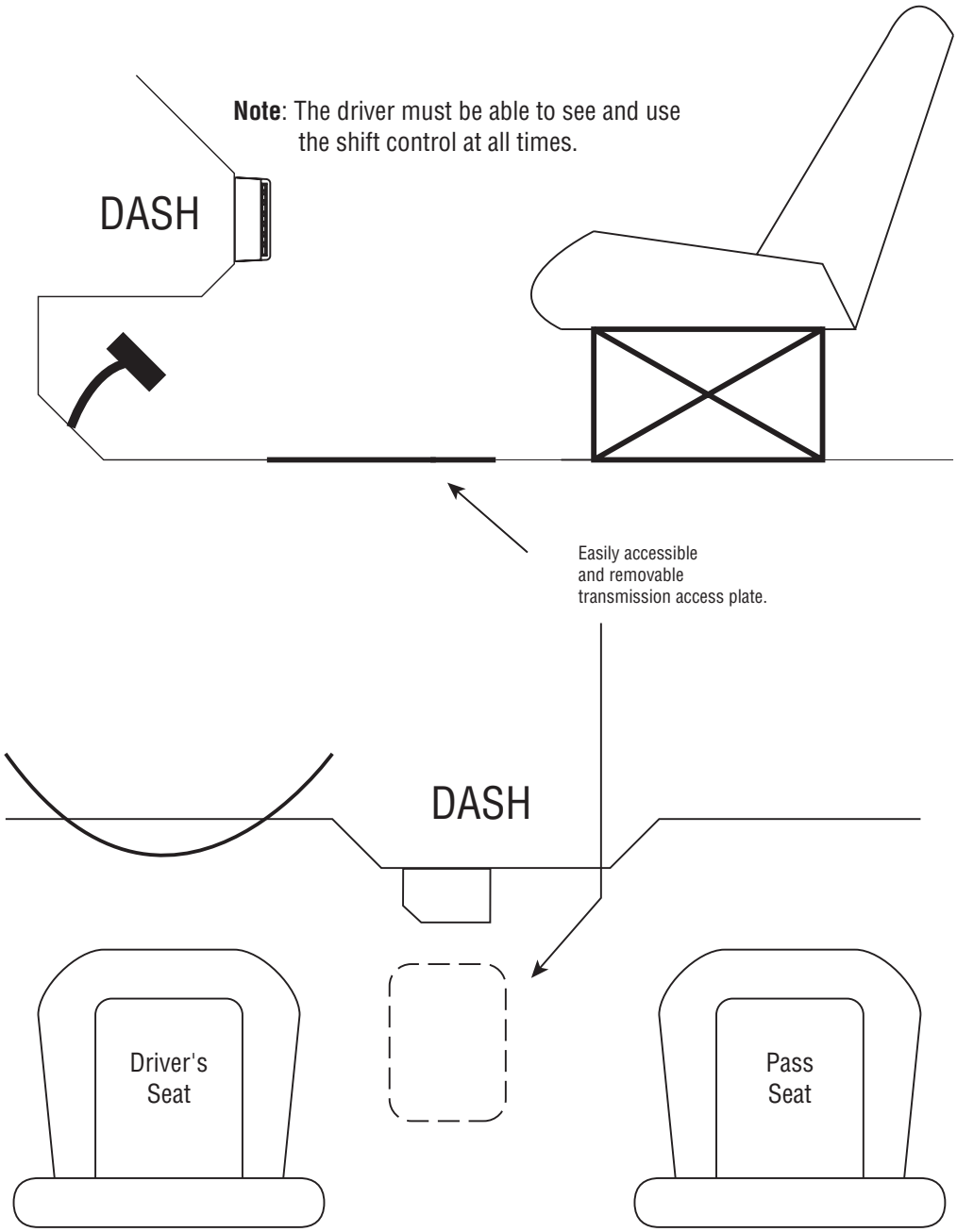

Typical Tower Mount Configuration

1. Minimum floor or support plate thickness for mounting the tower assembly is .250” for aluminum or .125” for steel. The OEM is responsible for providing a tower mounting surface sufficient to make the shift tower “feel solid”.
2. Floor plate connectors must be mounted to prevent contamination from entering the tower area.
3. The Shift Control assembly must be mounted in the cab within easy reach of the driver’s normal position.

Note: The driver must be able to see and use the Shift Control at all times.

4. The Shift Control assembly should not interfere with other vehicle related controls or features.
5. If the shift tower is not mounted on a removable plate, an access floor plate is necessary to service components on top of the transmission. See “Requirements” on page 3.

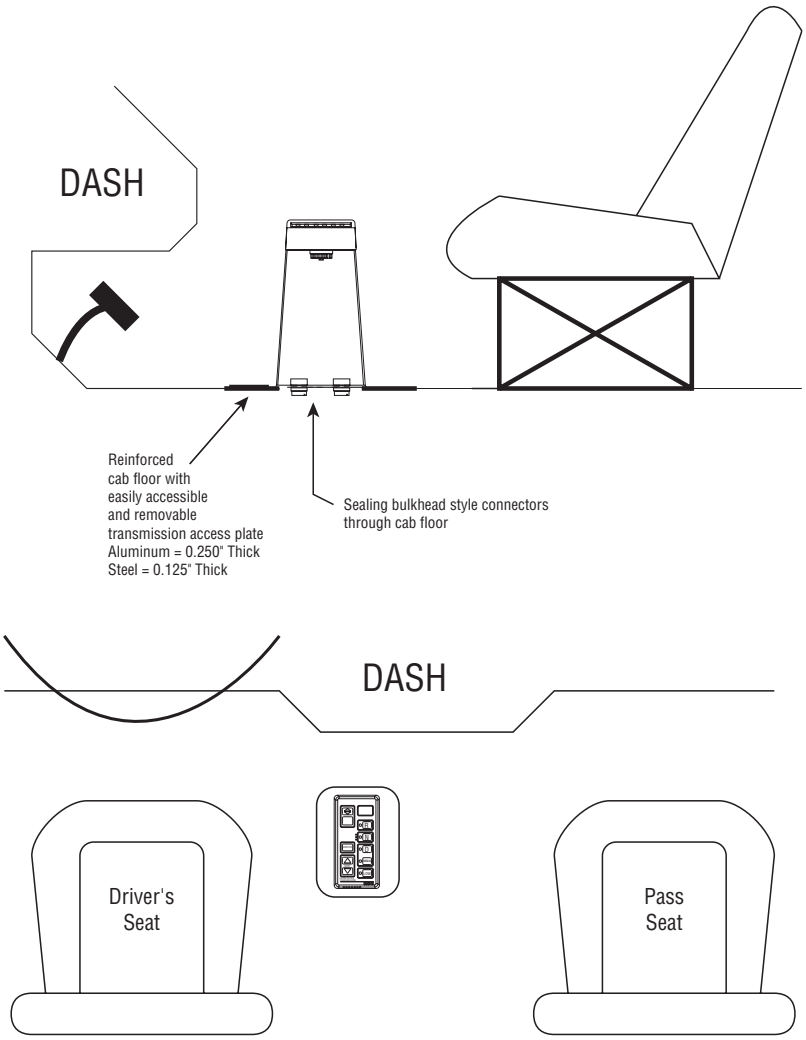

Cable

Conductor Size

The cable outside the cab shall be a minimum of 16 gauge (1.0 mm^2). The cable inside the cab shall be a minimum size of 18 gauge (0.8 mm^2). Note that these sizes are minimum requirements only. Conductor size may need to be increased depending on current carrying requirements.

Cable Size	20 AWG (.05 mm^2)	18 AWG (.08 mm^2)	16 AWG (1 mm^2)	14 AWG (2 mm^2)	12 AWG (3 mm^2)	10 AWG (5 mm^2)
Current Capability	13 Amp	17 Amp	21 Amp	28 Amp	36 Amp	46 Amp

Conductor Material

Conducting material shall be stranded bare copper wire.

Conductor Construction

Cable Size	20 AWG (.05 mm^2)	18 AWG (.08 mm^2)	16 AWG (1mm^2)	14 AWG (2mm^2)	12 AWG (3mm^2)	10 AWG (5mm^2)
Conductor Strands x size	7 x 28 AWG	16 x 30 AWG	19 x 29 AWG	19 x 27 AWG	19x 25 AWG	19 x 23 AWG

Insulation Material and Thickness

The cable shall be GXL: General Purpose, Cross (X) Linked polyerthylene conforming to SAE J-1128.

Connectors

Connectors shall be designed for use in the heavy-duty industry. Each connector shall feature a quick-disconnect through a bayonet coupling, positive lock or bolt-together style. Packard/Delphi 280 Series or equivalent should be used when possible. Connectors shall have the capability of being probed by a commercially available volt/ohm meter without being damaged.

Sealed Connectors

Sealed connectors shall be required outside the cab environment. The connector seal shall not come off when removing a connector from its mate. Cable seals shall be required to fix the size of the cable per manufacturer specifications.

Unsealed Connectors

Unsealed connectors can be used inside a cab environment only.

Cable

Terminals

Terminals shall be sized for the correct current capacity of the circuit as stated by the manufacturer.

Terminals shall be plated with tin, nickel, gold, etc. Mating terminals shall be plated with the same material. Gold plated terminals shall be required in 5 volt dry circuits. Beryllium Copper or equivalent should be used as a base material.

Ring Terminals

Terminals such as ring, bullet, spade, ect., shall be sized for the correct current capacity of the circuit as stated by the manufacture. Terminals shall be plated and non-insulated. Sleeves shall be insulated with a double wall shrink tubing.

Convoluted Conduit

Convoluted conduit must have a maximum operating temperature of at least 300°F (149°C).

Braided Loom (Mesh)

Coverage: A minimum of 10, maximum of 12 picks per inch. The braid shall be woven so as to produce a tight non-slip covering over the cables. The braid shall be heat-sealed to prevent unraveling. Braid must have a minimum service temperature of 280°F (138°C).

Insulating Sleeves

Sleeves shall be constructed of a heat shrinkable, irradiated, adhesive lined, semi-rigid polyolefin. The color shall be black. Typical shrinkage shall be 50% in diameter when exposed to heat (300°F) (150°C).

Tape

Adhesive tape for harness forming and spot taping shall be polyvinyl chloride (PVC). The tape shall have a pressure sensitive adhesive coating on one side.

Assembly Procedures

Crimping

The crimp shall be applied with a tool specified by the manufacture of the terminal.

Terminals shall be applied according to terminal manufacturer's specifications.

Stripping

An allowable maximum of 2 strands may be cut on 16 gauge or larger, 1 strand on 18 gauge, and no strands on 20 gauge in the crimp area.

Cable

Soldering

No terminals shall be soldered unless specifically indicated on the individual print. The function of solder is to join two or more metals at temperatures below their melting point. This provides metal and electrical continuity resulting in low resistance connections. It also precludes corrosive affects from the junction. A solder point also allows for temperature induced torsional stress without rupture of the joint. Solder connections shall conform to Eaton's workmanship specifications. Flux shall clean the metal but not attack, corrode or oxidize the metal. Acid type flux shall not be used.

Splice

Splice clips are allowed. The splice clip shall be crimped and variac-soldered with 60/40 solder. Resistive weld is also an approved method for splicing. Splices shall be insulated with 2-inch long, heat-shrinkable tubing.

Circuit Identification

Circuit identification shall be by either numbers/letters or color-coding. When numbers/letters are used, coding shall be applied continuously along the length in approximately two to three inch increments. Code shall be visible at breakouts. When color-coding is used, the color identification shall consist of a color stripe. If greater color combinations are required, the cable shall have a color dash with stripe on opposite sides. Stripe and numbers shall be resistant to oil, grease, dirt, and ethylene glycol.

Twisted Cables

2 conductor cables shall have 12 twists/foot. (16 and 18 gage cable only)

All cable lengths to multi-cavity connectors shall be cut and dressed to ensure no undue stress is on an individual wire after insertion into the connector. After insertion, all terminals shall be checked for retention.

Wiring Diagrams OEM Responsibility

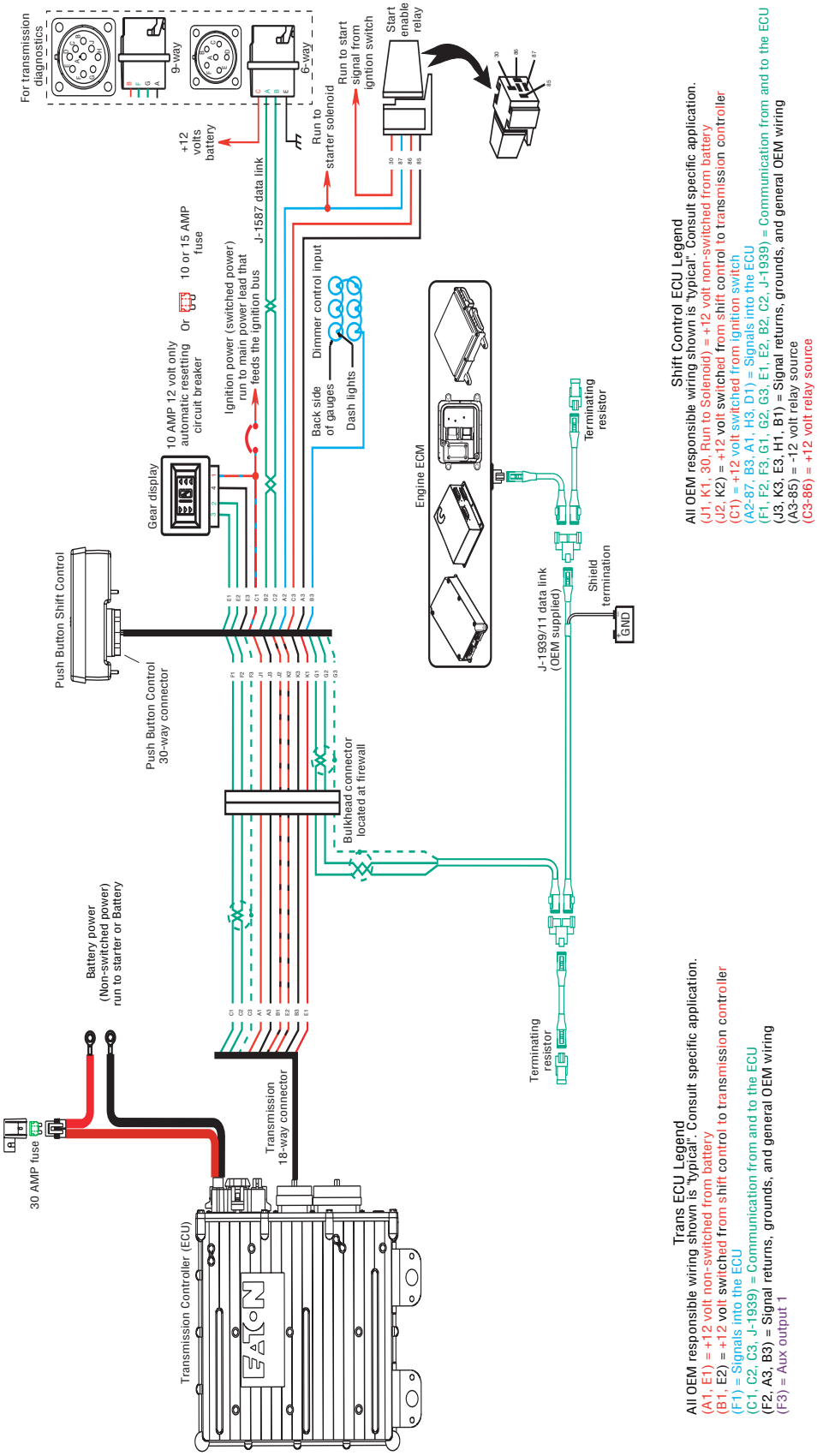

Shift Control ECU Legend
All OEM responsible wiring shown is "typical". Consult specific application.
(J1, K1, 30, Run to Solenoid) = +12 volt non-switched from battery
(J2, K2) = +12 volt switched from shift control to transmission controller
(C1) = +12 volt switched from ignition switch
(A2-87, B3, A1, H3, D1) = Signals into the ECU
(F1, F2, F3, G1, G2, G3, E1, E2, B2, C2, J-1939) = Communication from and to the ECU
(J3, K3, E3, H1, B1) = Signal returns, grounds, and general OEM wiring
(A3-85) = -12 volt relay source
(C3-86) = +12 volt relay source

Trans ECU Legend
All OEM responsible wiring shown is "typical". Consult specific application.
(A1, E1) = +12 volt non-switched from battery
(B1, E2) = +12 volt switched from shift control to transmission controller
(F1) = Signals into the ECU
(C1, C2, C3, J-1939) = Communication from and to the ECU
(F2, A3, B3) = Signal returns, grounds, and general OEM wiring
(F3) = Aux output 1

Typical Dash Mounted System

The dash location is for the following:

Start Enable Relay

Gear Display

Push Button Shift Control

ATA Connector (J1587 Link)

Dimmer Control Input (VDash)

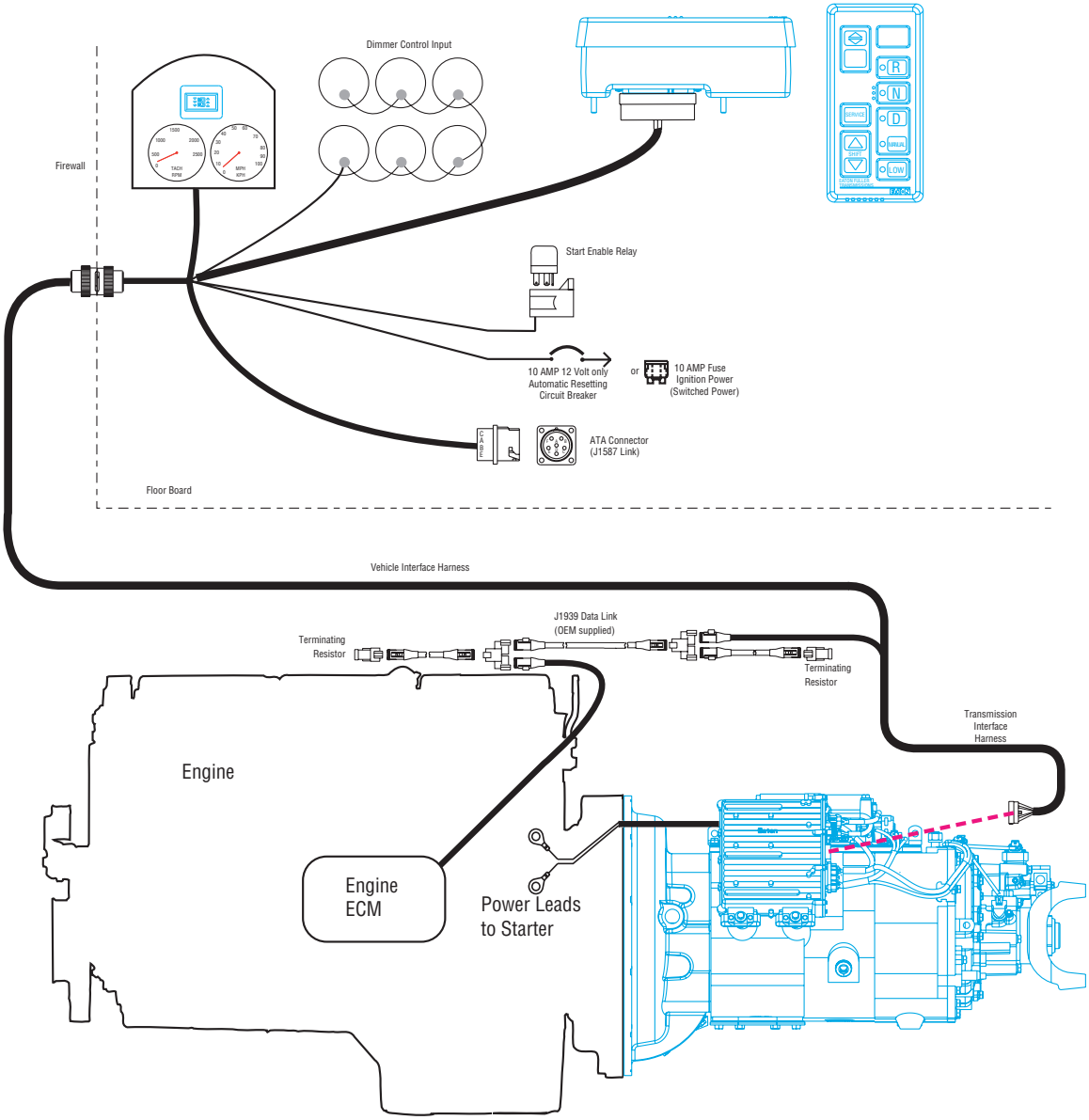

Typical Tower System

The dash area location is for the following:

Start Enable Relay

Gear Display

ATA Connector (J1587 Link)

Dimmer Control Input (VDash)

Ignition Power (VIGN)

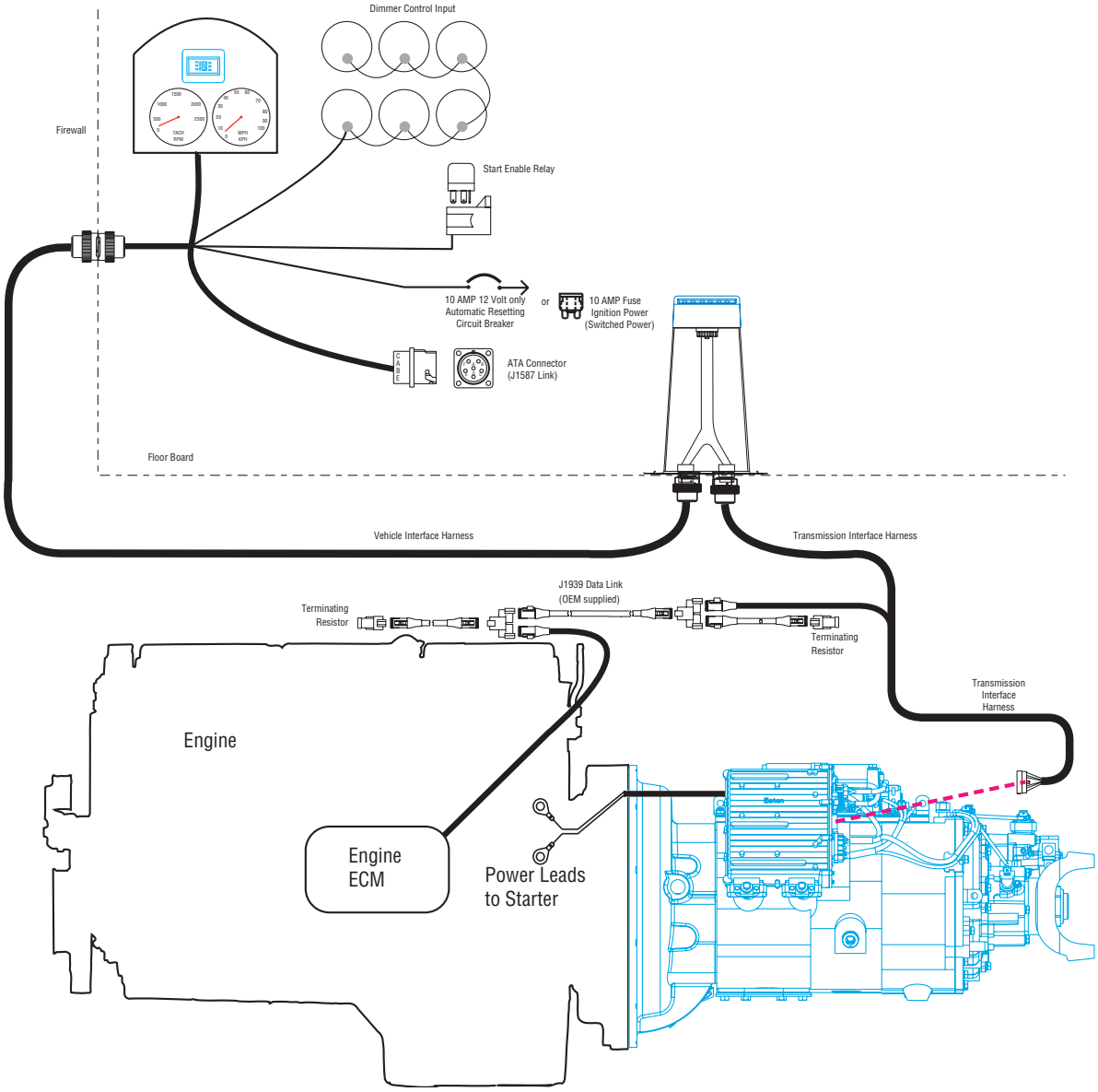

Power Harness

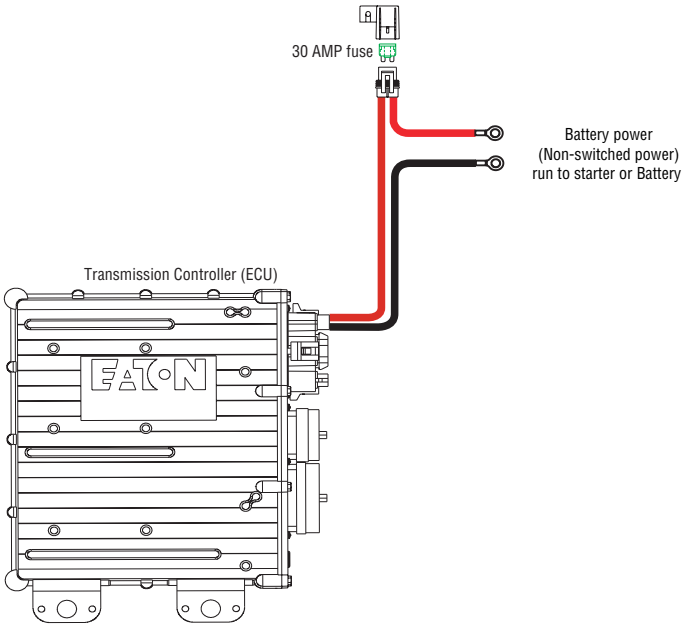

The OEM is responsible for the design of the Main Power Harness.

Note: Main power and ground must be able to carry 20 amps at 9 Volts with no more than.05 ohms.

To calculate the.05 ohms, take the length of the wire from the battery or starter to transmission and multiply the ohms per foot for that wire gauge.

12AWG(3.0mm²)=.0016 ohms per ft. (25.4 mm)

10AWG (5.0mm²)= .001 ohms per ft. (25.4mm)

Each connection is <.005 ohms

Example: The Main Power Harness is four foot long made of 12 AWG. (3.0mm²) which equals .0016 ohms per foot. +12 vdc and ground wires combined equals 8 feet (203mm).

The Main Power connector is connected to the starter, which equals six connections. According to the Delphi Packard Electrical Systems. each connector is .005 ohms.

1. 8ft * .0016 ohms = .013 ohms
2. 6 connectors * .005 ohms = .03 ohms
3. .03 + .013 = .043 ohms

For this example the total resistance is a .043 ohm.

Power Harness

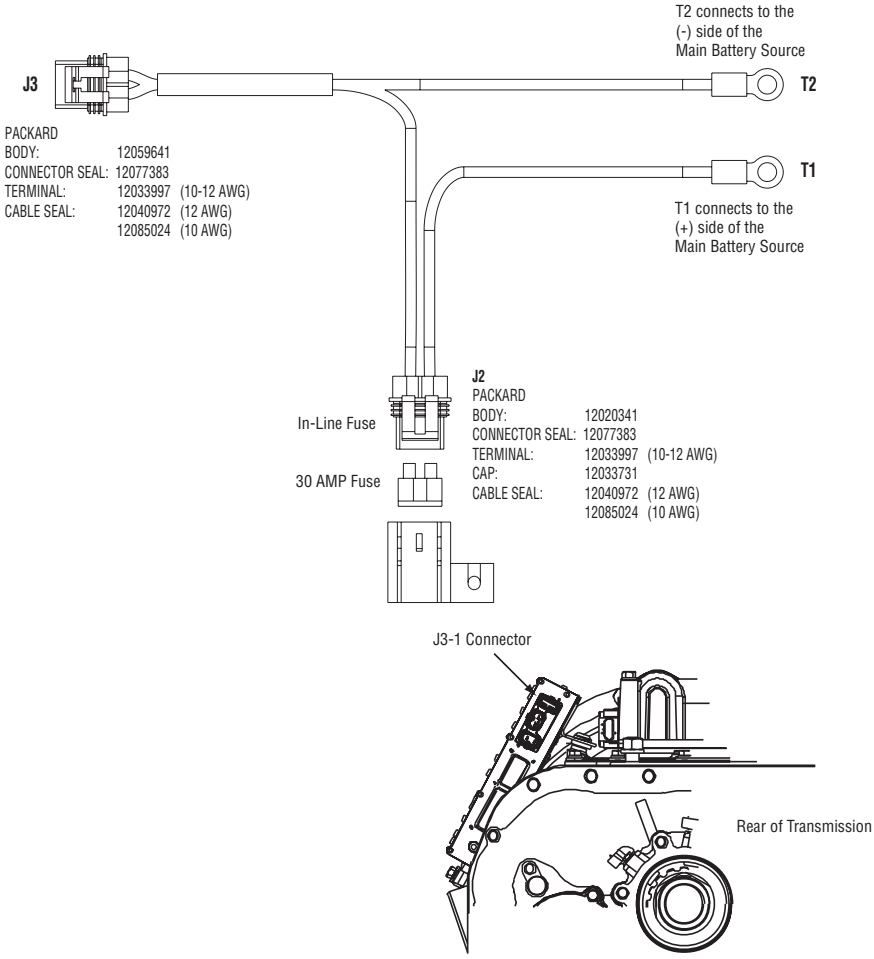

Note: The main power and ground must be able to carry 20 amps at 9 volts with no more than .05 ohms from the battery source.

Note: The main battery source can be Starter or Battery terminals (Power Distribution Module is acceptable). Frame rails and splices into other harnesses are not considered reliable battery sources.

FROM	TO	WIRE DESCRIPTION
J3-A	T2	Ground
J3-B	J2-B	12 Volts
J2-A	T1	Battery

Note: Power-Battery Negative (-) Must be disconnected PRIOR to removal or installation of ECU harness connectors.

Note: Removal of fuses is not recommended as the method of disconnecting power from the ECU. Making and breaking a circuit through tin plated terminals (e.g. ring terminals, fuses, most connectors) will destroy the plating on the terminal. Opening a switch contact or the main power link is the recommended method of interrupting power.

Transmission Interface

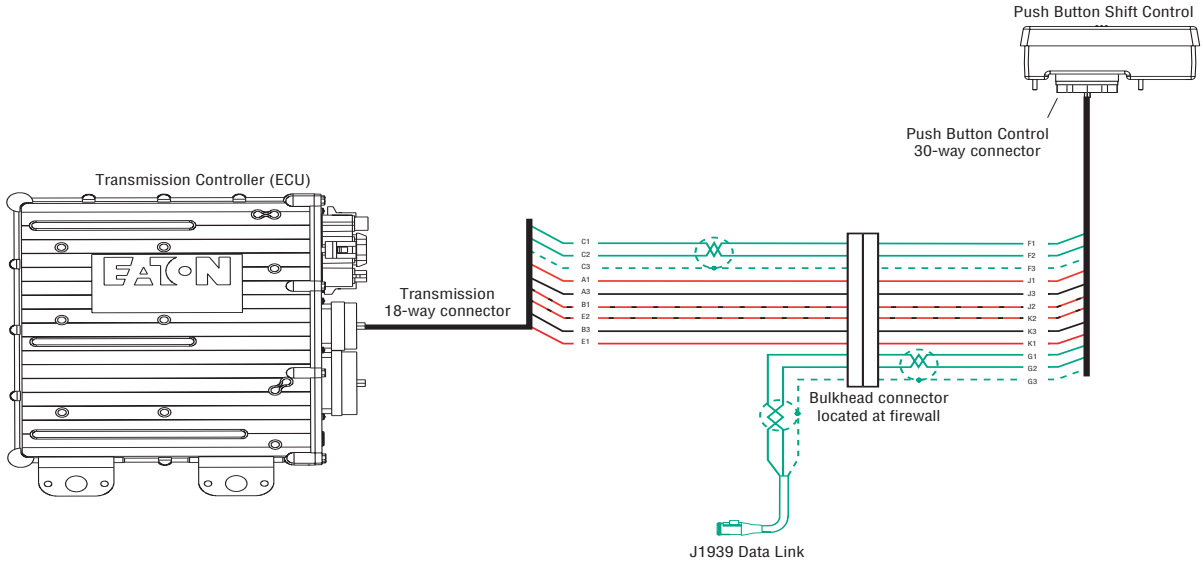

FRONT VIEW
Transmission (18-Way Connector)

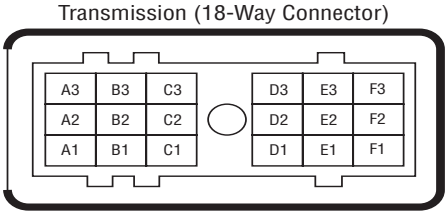

PACKARD
Connector 12040921
Terminal 12103881
Plug 12034413

FRONT VIEW
Push Button Control (30-Way Connector)

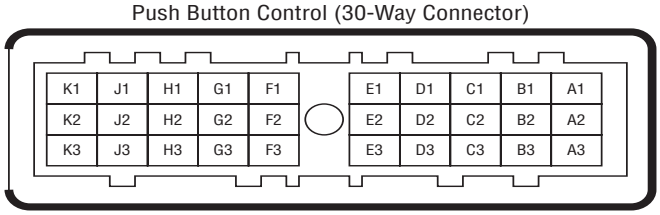

PACKARD
Connector 12048455
Terminal 12103881
Plug 12034413

Trans ECU Legend
All OEM responsible wiring shown is "typical". Consult specific application.
(A1, E1) = +12 volt non-switched from battery
(B1, E2) = +12 volt switched from shift control to transmission controller
(F1) = Signals into the ECU
(C1, C2, C3, J-1939) = Communication from and to the ECU
(F2, A3, B3) = Signal returns, grounds, and general OEM wiring
(F3) = Aux output 1

Transmission Interface

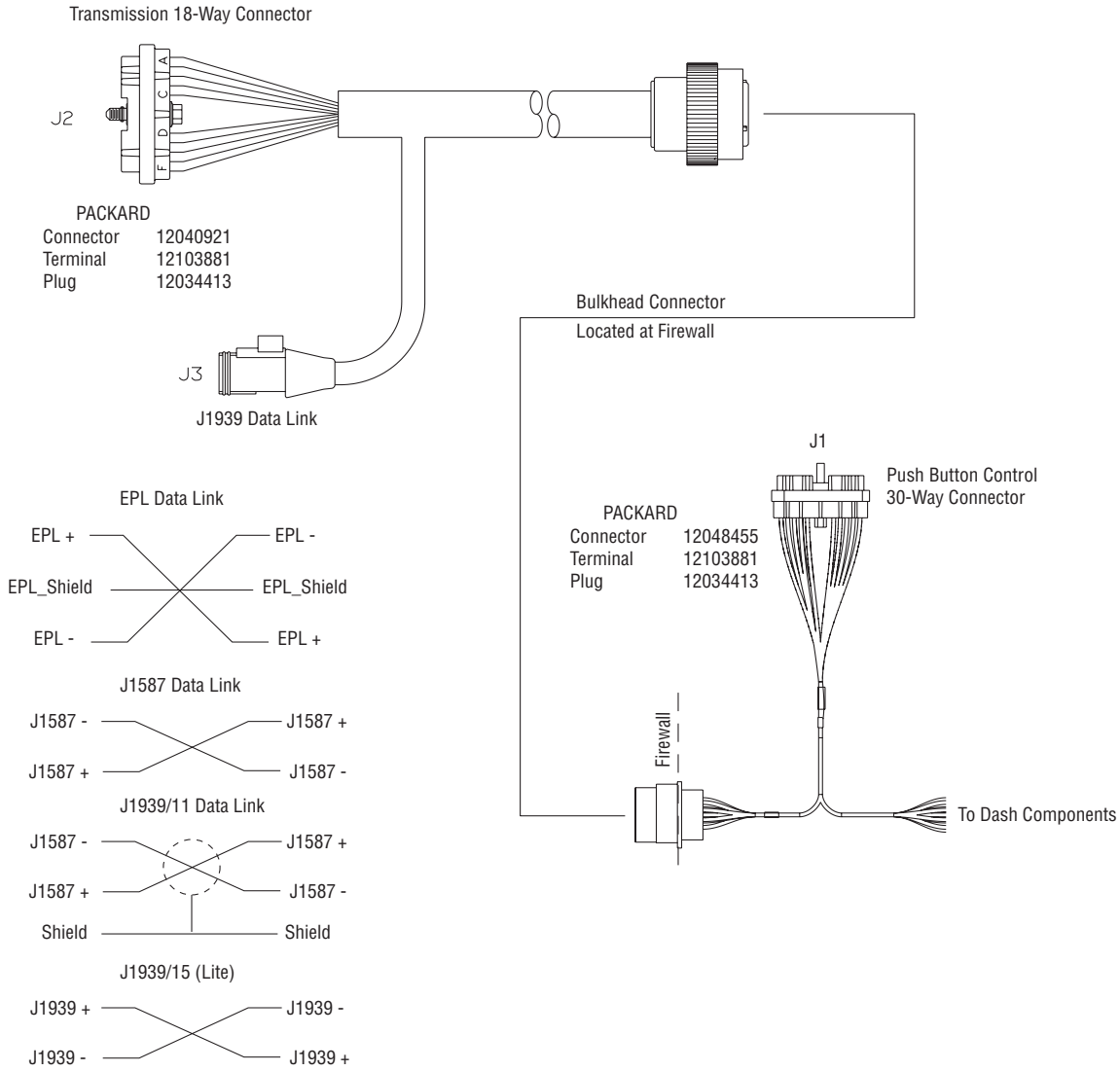

FROM	TO	DESCRIPTION
J1-F1	J2-C1	EPL+
J1-F2	J2-C2	EPL-
J1-F3	J2-C3	EPL Shield
J1-J1	J2-A1	VBATT 1
J1-K1	J2-E1	VBATT2
J1-J3	J2-A3	GND 1

FROM	TO	DESCRIPTION
J1-K3	J2-B3	GND 2
J1-J2	J2-B1	TRANSBATT 1
J1-K2	J2-E2	TRANSBATT 2
J1-G1	J3-A	J-1939 + (Yellow)
J1-G2	J3-B	J-1939 - (Green)
J1-G3	J3-C	J-1939 Shield

Typical Dash Harness

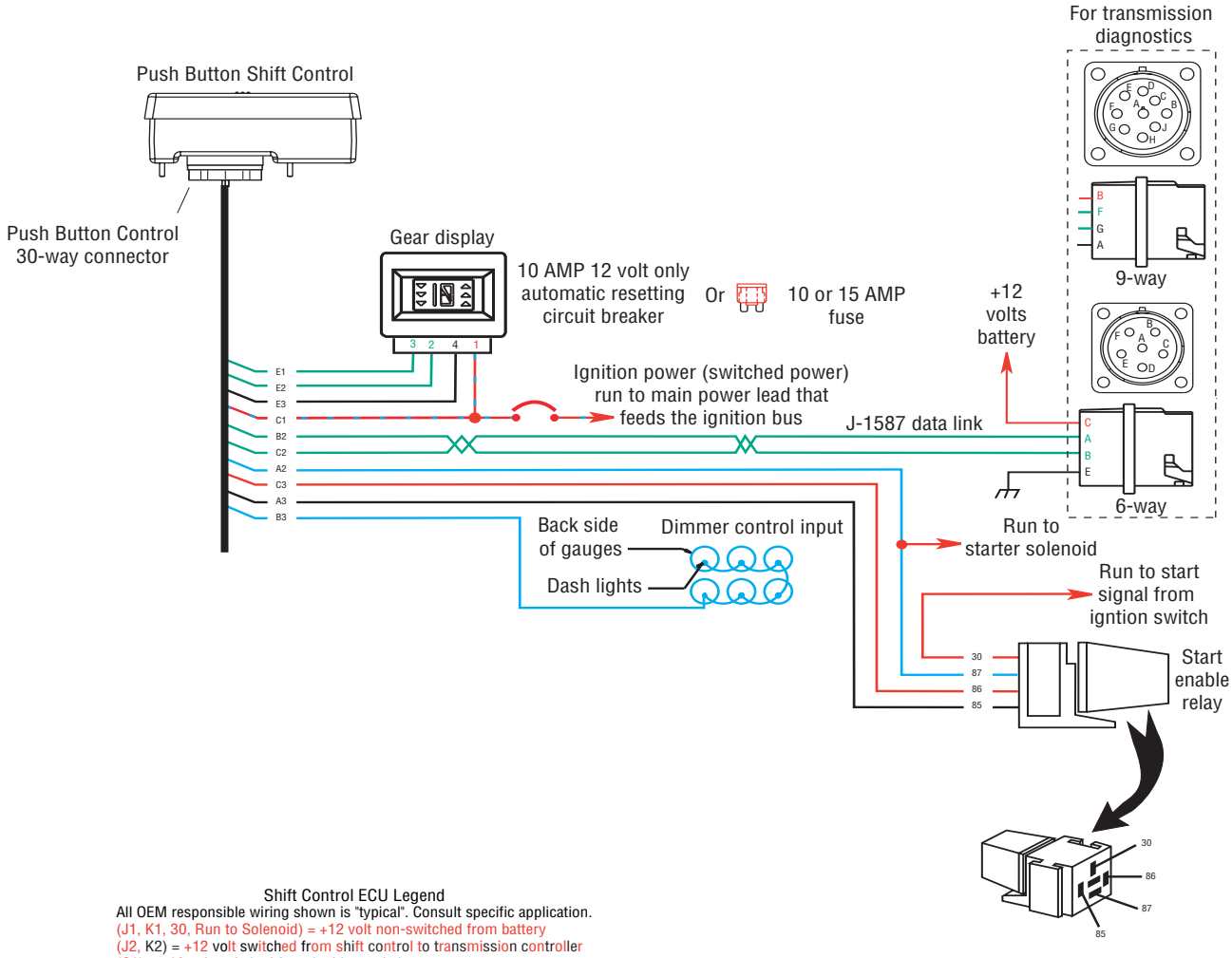

Shift Control ECU Legend

All OEM responsible wiring shown is "typical". Consult specific application.

(J1, K1, 30, Run to Solenoid) = +12 volt non-switched from battery

(J2, K2) = +12 volt switched from shift control to transmission controller

(C1) = +12 volt switched from ignition switch

(A2-87, B3, A1, H3, D1) = Signals into the ECU

(F1, F2, F3, G1, G2, G3, E1, E2, B2, C2, J-1939) = Communication from and to the ECU

(J3, K3, E3, H1, B1) = Signal returns, grounds, and general OEM wiring

(A3-85) = -12 volt solenoid source

(C3-86) = +12 volt relay source

Typical Dash Harness

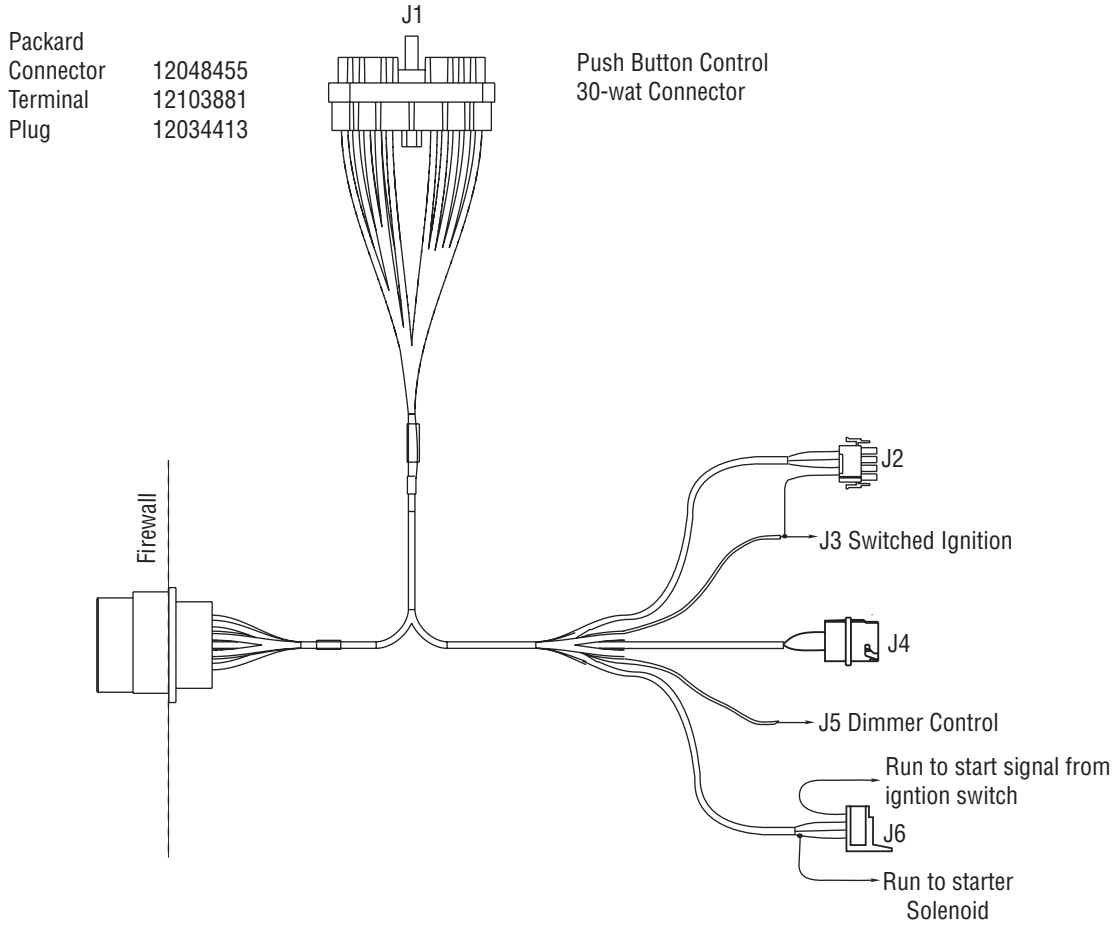

FROM	TO	WIRE DESCRIPTION
J1-E1	J2-3	CLOCK +
J1-E2	J2-2	DATA -
J1-E3	J2-4	GND
J2-1	SPLICE (J3)	IGNITION 1
JI-C1	SPLICE (J3)	IGNITION 2
J1-B2	J4-A	J1587 + (6-pin)
J1-C2	J4-B	J1587 - (6-pin)
J1-B3	J5	DIMMER CONTROL
J1-C3	J6-85	START ENABLE RELAY +
J1-A3	J6-86	START ENABLE RELAY -
J1-A2	J6-87	START ENABLE RELAY LATCH
J6-87	SPLICE	STARTER SOLENOID

Gear Display Module

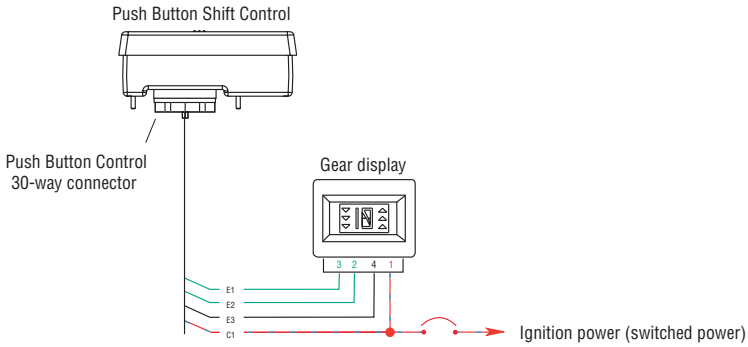

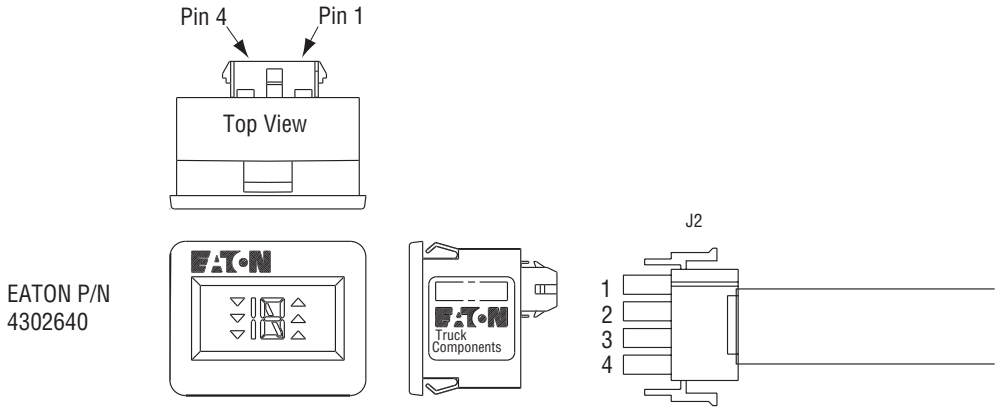

FRONT VIEW
Shift Control (30-Way Connector) J1

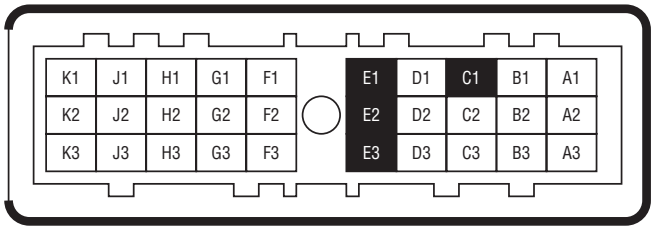

Interconnection Table

FROM	TO	DESCRIPTION
J1-E1	J2-3	CLOCK +
J1-E2	J2-2	DATA -
J1-C1 (spliced with ignition)	J2-1	DISPLAY POWER +
J1-E3	J2-4	DISPLAY POWER -

Gear Display Module

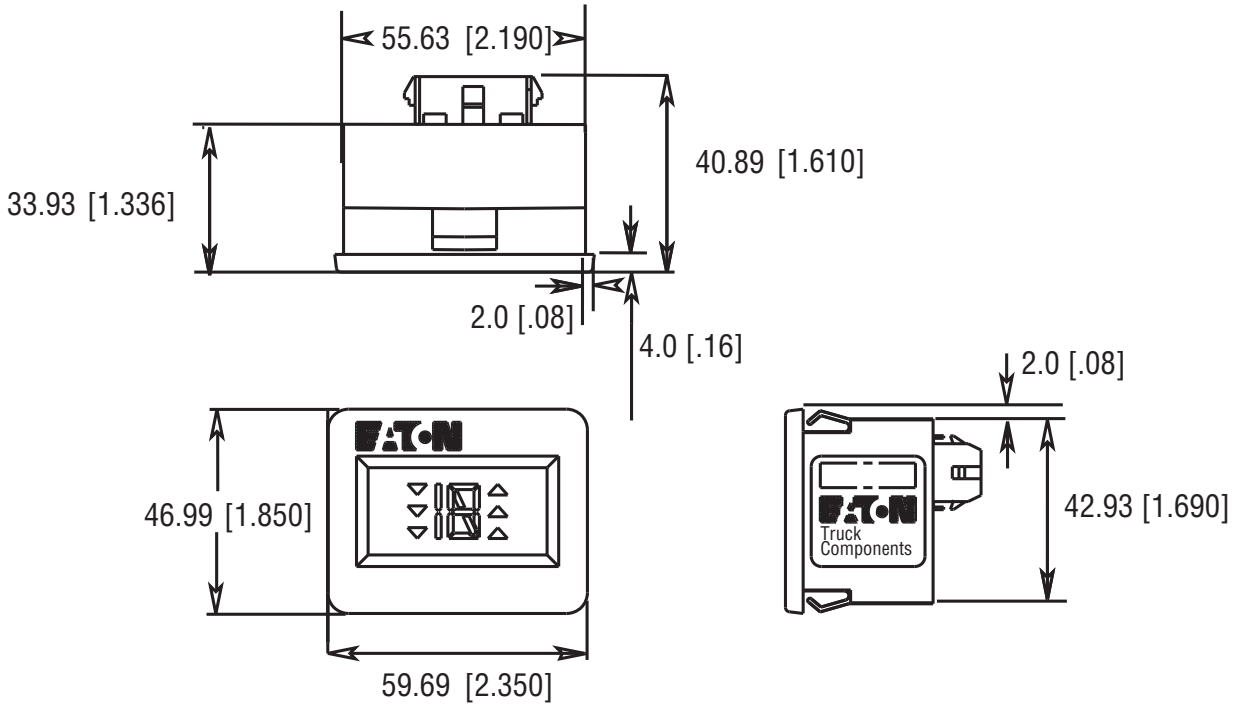

Panel Cut-Out Dimensions:

43.1 [1.70] X 56.1 [2.20] X 0.254 [.010]

Mating Connector information:

AMP 4-way

Body 1-480702-0

Terminal 350551-2

Ignition Circuit Detail

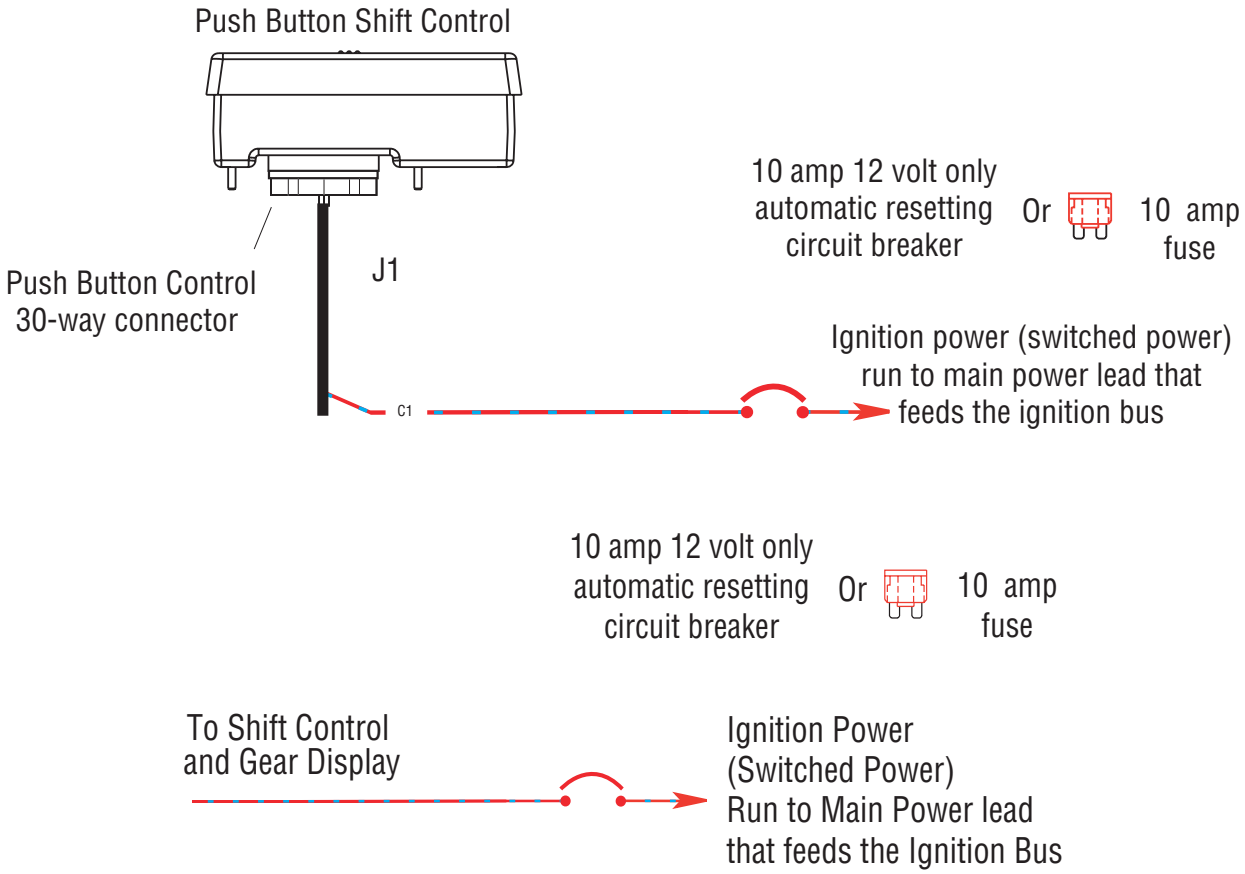

FRONT VIEW
Shift Control (30-Way Connector) J1

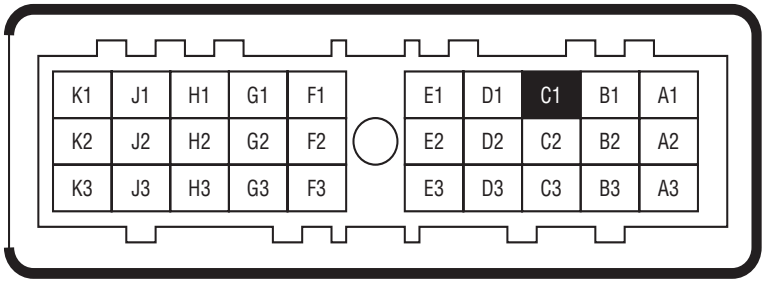

FROM	TO
J1-C1	VIGN

Note: On isolated battery systems, the ignition should be supplied by the “start” battery.

J-1587 Diagnostic Link

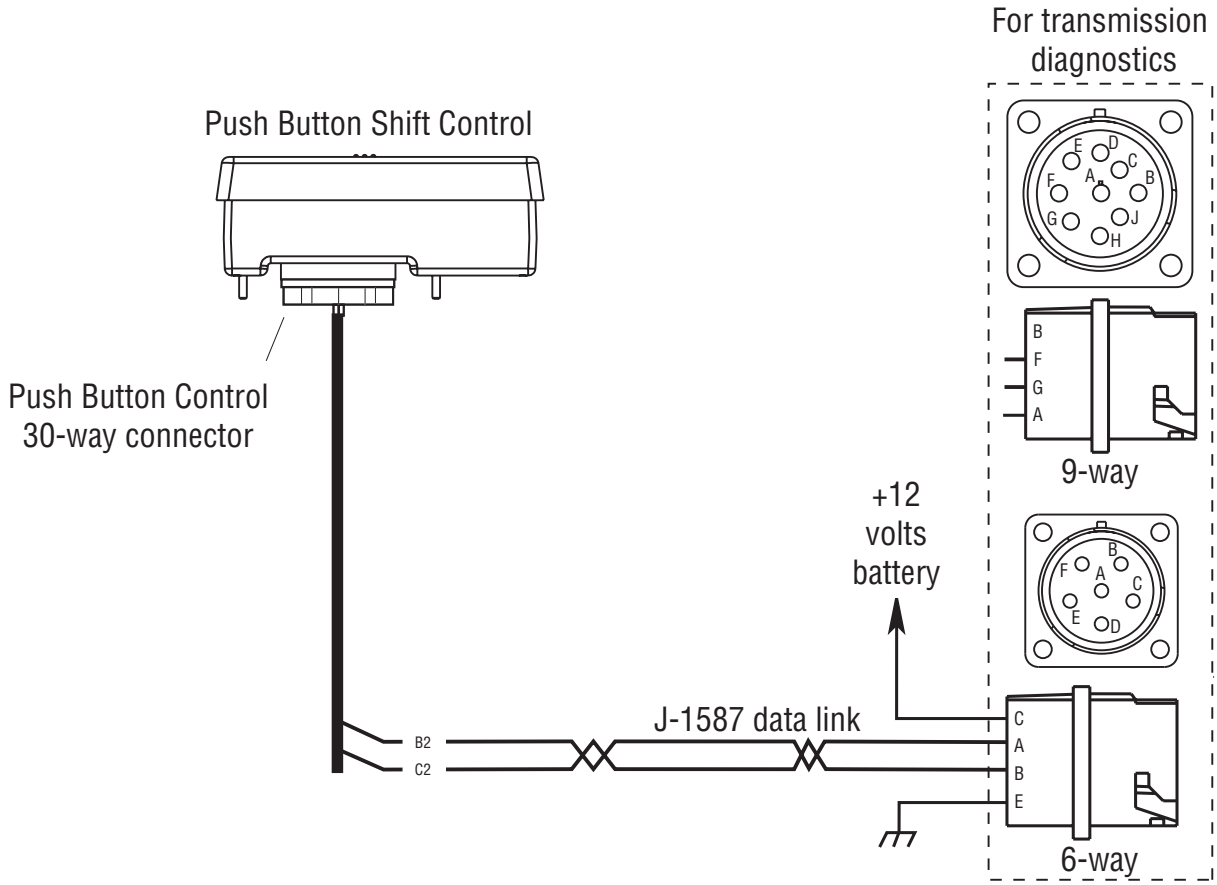

Note: The diagnostic connector must be mounted on the left side of the cab and easily accessible per SAE J -1587.

Note: SAE has two approved connectors. Eaton recommends the Deutsch 6-pin connector shown. The Deutsch 9-pin is shown for reference only.

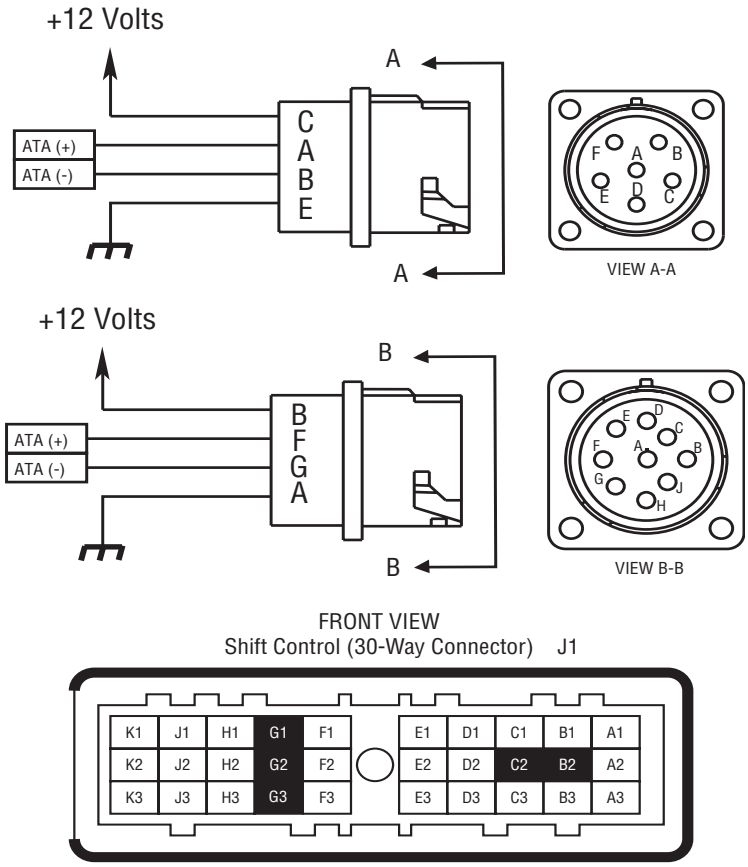

FROM	TO 6-PIN	TO 9-PIN	DESCRIPTION
J1-B2	A	F	ATA +
J1-C2	B	G	ATA -
__	C	B	BATTERY +
__	E	A	GROUND -
J1-G1	__	C	J-1939 +
J1-G2	__	D	J-1939 -
J1-G3	__	E	J-1939 shield

Dimmer Control Input Connection

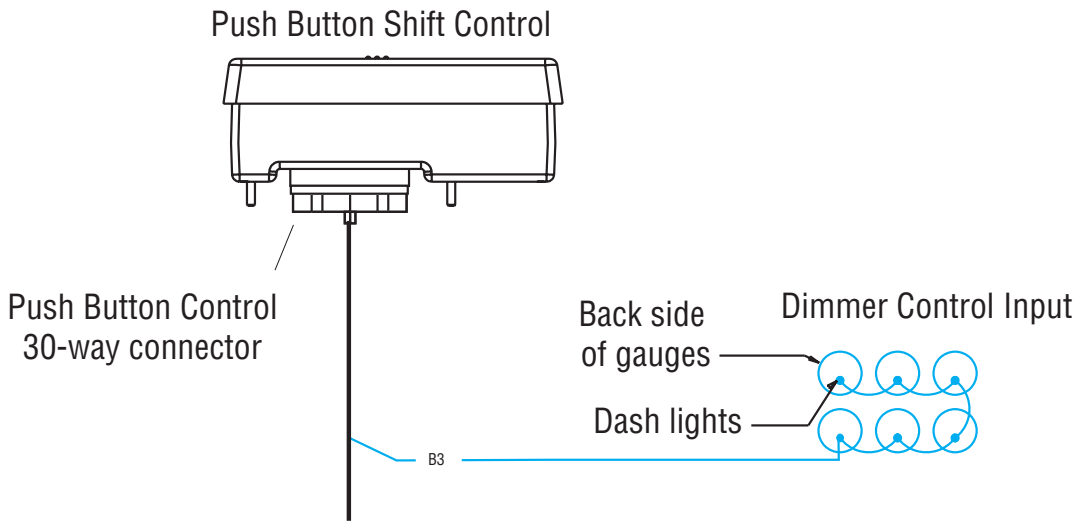

Note: Connect VDASH to the dash lights or running lights. This input will dim the lights on the Shift Control when the lights are on. When VDASH input is off, the lights on the Shift Control will be on full.

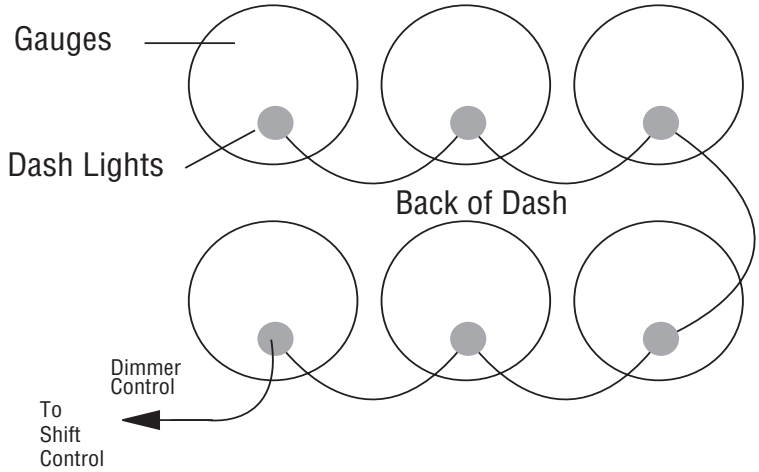

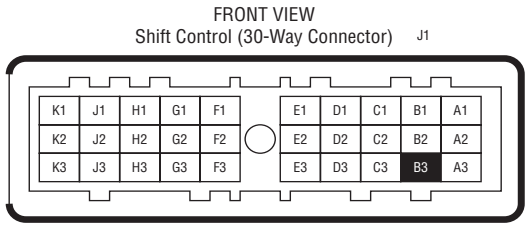

FROM	TO
J1-B3	VDASH

Typical Start Enable Circuit

Startability must meet FMVSS Standard 102, Section 3.1.3: “The engine starter shall be inoperative when the transmission shift lever is in a forward or reverse direction position”.

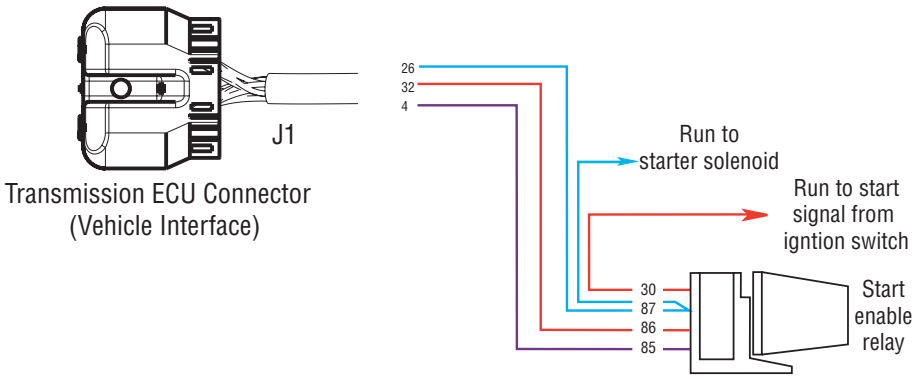

Front View
Transmission ECU Connector
(Vehicle Interface)

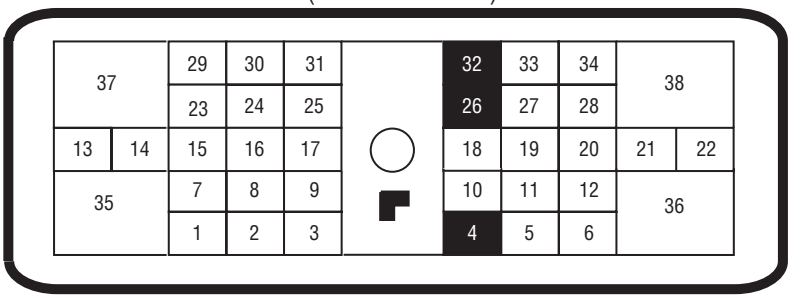

FROM PIN	TO RELAY PIN	DESCRIPTION
J1-32	86	START ENABLE RELAY COIL, POSITIVE
J1-26	87	START ENABLE LATCH
J1-4	85	START ENABLE RELAY COIL, NEGATIVE

Typical Start Enable Circuit

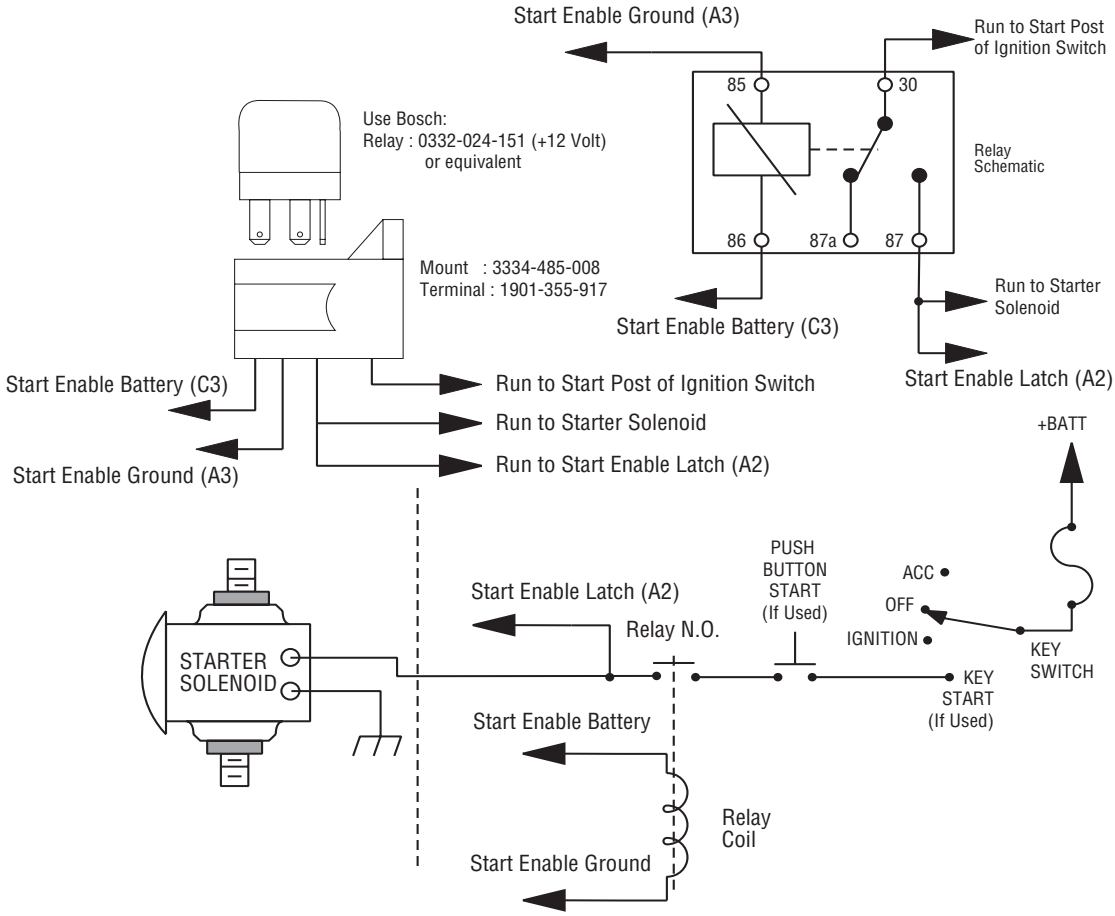

FRONT VIEW
Shift Control (30-Way Connector) J1

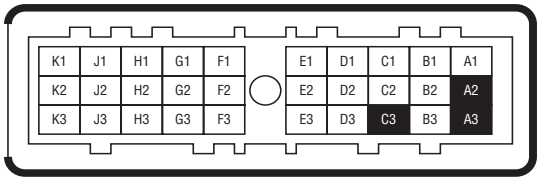

FROM	TO RELAY PIN	DESCRIPTION
J1-C3	86	START ENABLE BATTERY
J1-A2	87	START ENABLE LATCH
J1-A3	85	START ENABLE GROUND

J-1939 Data Link

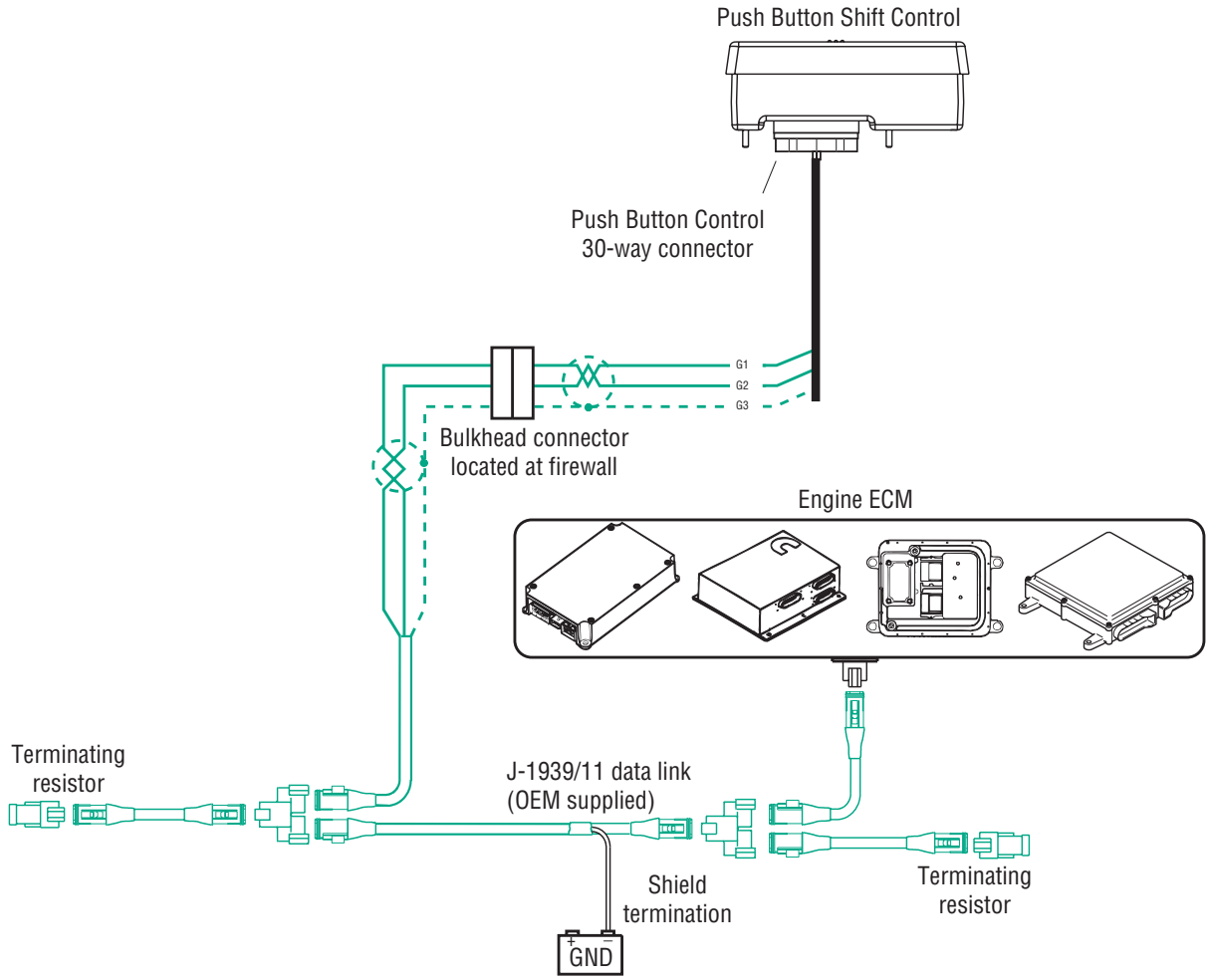

J-1939 Data Link Detail

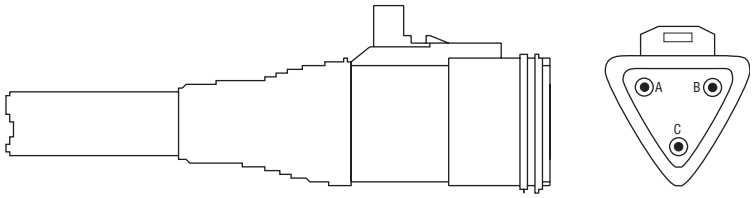

FRONT VIEW
Shift Control (30-Way Connector) J1

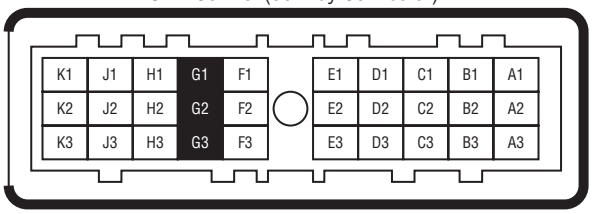

FROM	TO	DESCRIPTION
J1-G1	A	J-1939 High +
J1-G2	B	J-1939 Low -
J1-G3	C	J-1939 Shield

J-1939/11 Data Link Detail

Recommended Cable Manufacturer	Cable Part Number	Round	J-1939 (+) (PIN "A") Color	J-1939 (-) (PIN "B") Color	J-1939 (PIN"C") Shield
Champlain	23-00013-001	Yes	Yellow	Green	N/A
Champlain	23-00028-001	No	Yellow	Green	N/A
Raychem	2021D0311	No	Yellow	Green	N/A
Raychem	2021D0001	No	Yellow	Green	N/A
Raychem	2021D0301	Yes	Yellow	Green	N/A
BICC Brand-Rex	T-14945	Yes	Yellow	Green	N/A

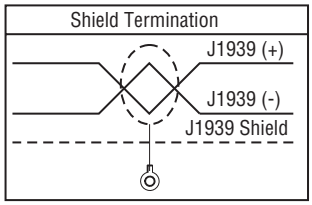

** If an additional wire is added to the drain for insertion into the connector, no shield terminal is used and the signal terminal quantity is 3. If the drain wire is to be directly inserted into the connector, then a shield terminal is used and the signal terminal quantity is 2.

Ref.	Body	Signal Terminals (QTY)	Shield Terminal (QTY)	Wedge	Function
A	DT06-3S-E008	0462-201-1631 (3) **	0462-221-1631 (1) **	W3S-1939	Through Connector
B	DT06-3S-E008	0462-201-1631 (3) **	0462-221-1631 (1) **	W3S	Stub Connector
C	DT04-3P-P007	N/A	N/A	N/A	"T" Receptacle
D	DT04-3P-P006	N/A	N/A	N/A	120 Ohm Termination
E	DT04-3P-E008	0460-202-1631 (3) **	0460-247-1631 (1) **	W3P	ECU Receptacle
F	DT04-3P-LE08	0460-202-1631 (3) **	0460-247-1631 (1) **	W3P	Flang Receptacle
G	DT06-3S-P006	N/A	N/A	N/A	120 Ohm Termination

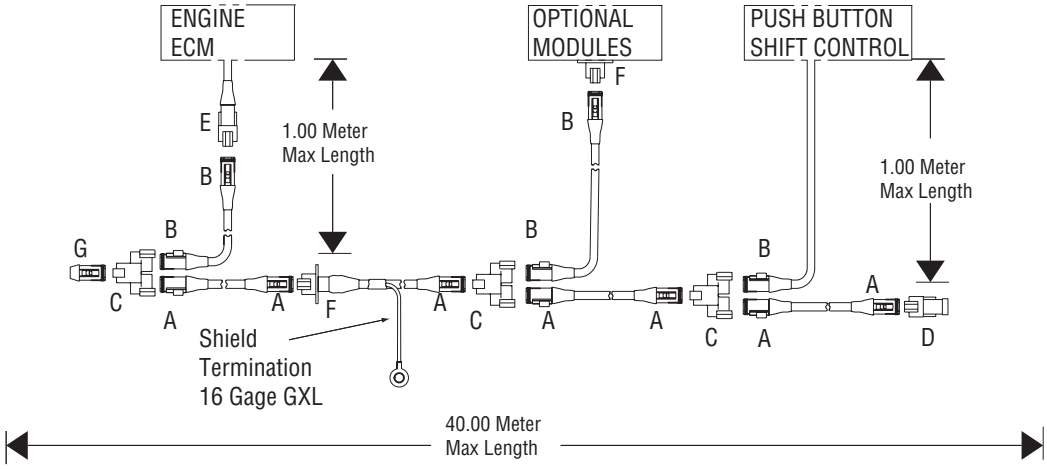

SAE J-1939/11 Recommended Cable Termination Procedure

Remove cable outer jacket approximately 25 mm.

Remove foil from exposed wires to within 2 mm from cable jacket.

Strip insulation from data wires 7 mm.

Attach extended wire barrel socket contact to the drain wire or attach adhesive filler solder sleeve and wire to drain wire per manufacturer's recommendations.

For the solder sleeve option, cut the wire on the solder sleeve to a length of 25 mm and strip the insulation back 7 mm.

Crimp the appropriate terminal on each data wire and solder sleeve wire or the extended socket per the manufacturer's recommendations.

Slide an adhesive filler shrink tube over the cable end.

Install the terminals into the connector body per the manufacturer's instructions.

Install the wedge in the front of the connector body per the manufacturer's instructions.

Apply the shrink tube to the end of the connector body per the manufacturer's recommendation.

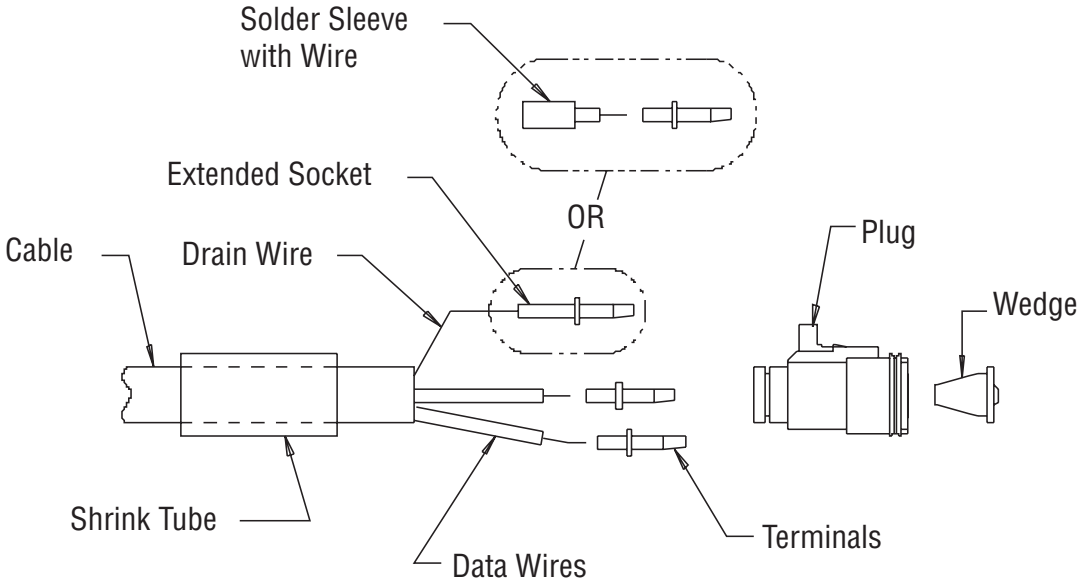

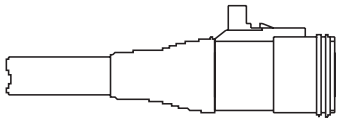

Final Assembly

Existing Drain Wire Splice/ Sealing Method

SAE J1939/11 Recommended Cable Splice Procedure

Remove cable outer jacket approximately 40-100 mm.

Remove foil shield from exposed wires to within 2 mm from cable jacket.

Strip insulation from data wires 7 mm ±0.8 mm.

Crimp stub branch lines and drain wire to main backbone data lines and drain wire.

Cover each splice with insulation shrink tubing.

Wrap unshielded area with shielding material.

Apply adhesive filled shrink tube to splice junction.

For shield termination, crimp minimum 16 gauge GXL wire to drain wire.

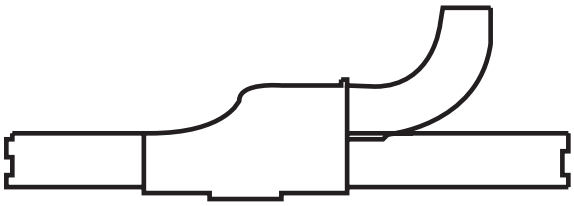

SAE J-1939/11 Recommended Cable Splice Procedure

Remove cable outer jacket approximately 40-100 mm.

Remove foil shield from exposed wires to within 2 mm from cable jacket.

Strip insulation from data wires 7 mm ± 0.8 mm.

Attach X-link wire to drain wire with crimp splice per manufacturer's recommendation.

Slide adhesive filled shrink tube over crimp splice.

Slide adhesive filled shrink tube over cable end.

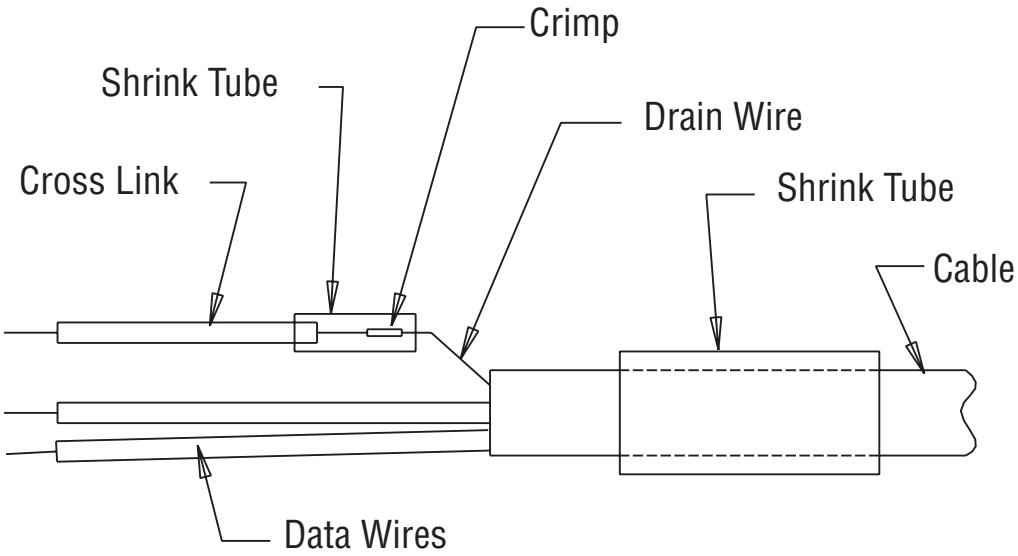

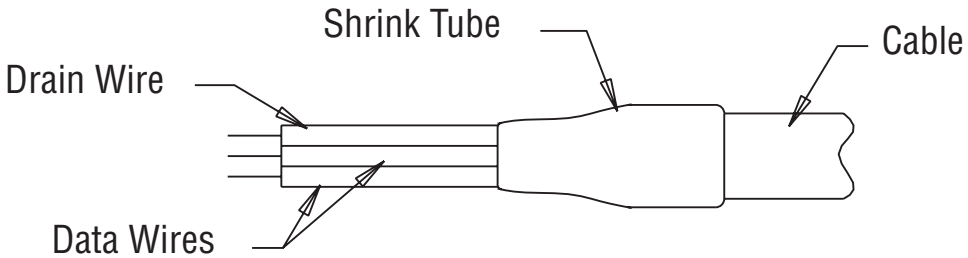

Final Assembly

J-1939/15 (lite) Data Link Specifications

Maximum 40 meter Length.

Maximum 3 meter stub length.

Maximum 10 modules on segment.

Twisted pair (18 or 20 AWG) with 1 twist per inch.

120 Ohm terminating resistors must be used.

Connector at ECU is not defined.

The third pin for shield is not used in ‘in-line’ and T-connectors.

Recommended Cable Manufacturer	Cable Part Number	Round	J-1939 (+) (PIN "A") Color	J-1939 (-) (PIN "B") Color
Champlain	J1939/15	Yes	Yellow	Green

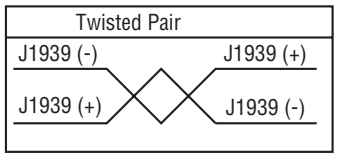

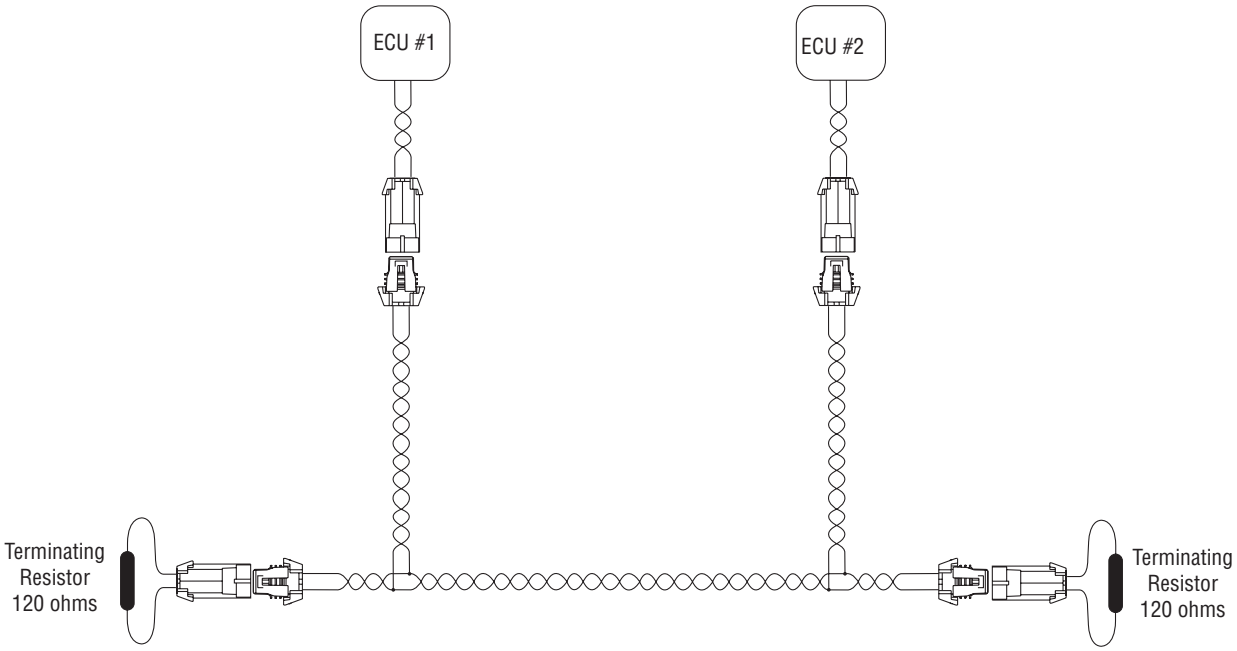

Vehicle Harness Connector for all Caterpillar Adam III Electronic Engines

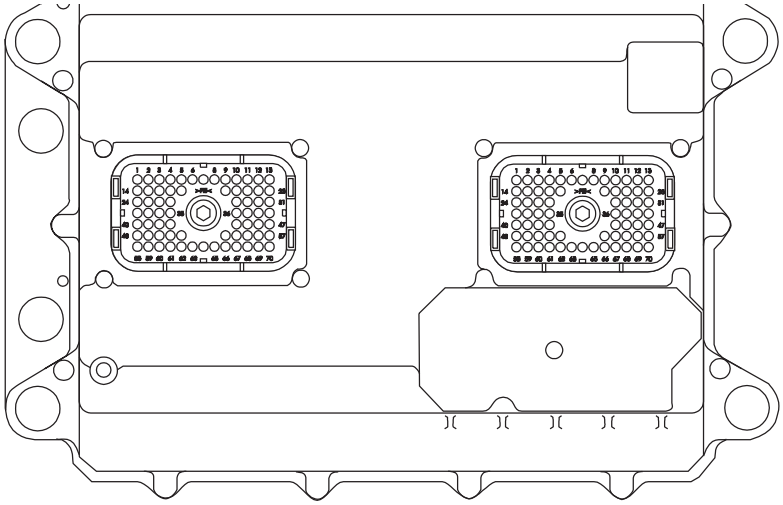

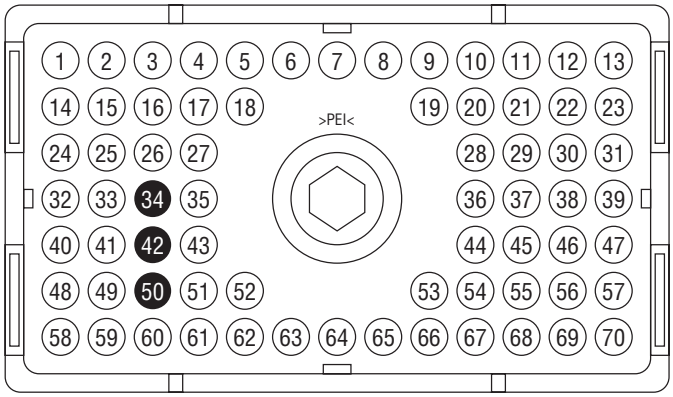

View From Harness Side of Connector P1

Note: See J-1939 Backbone section in this manual for connector information

FROM	DESCRIPTION
P1-50	J-1939 High +
P1-34	J-1939 Low -
P-42	J-1939 Shield

Location of the J-1939 Control Data Link on Detroit Diesel DDECIII and IV Engines

Electronic Control Module (ECM)

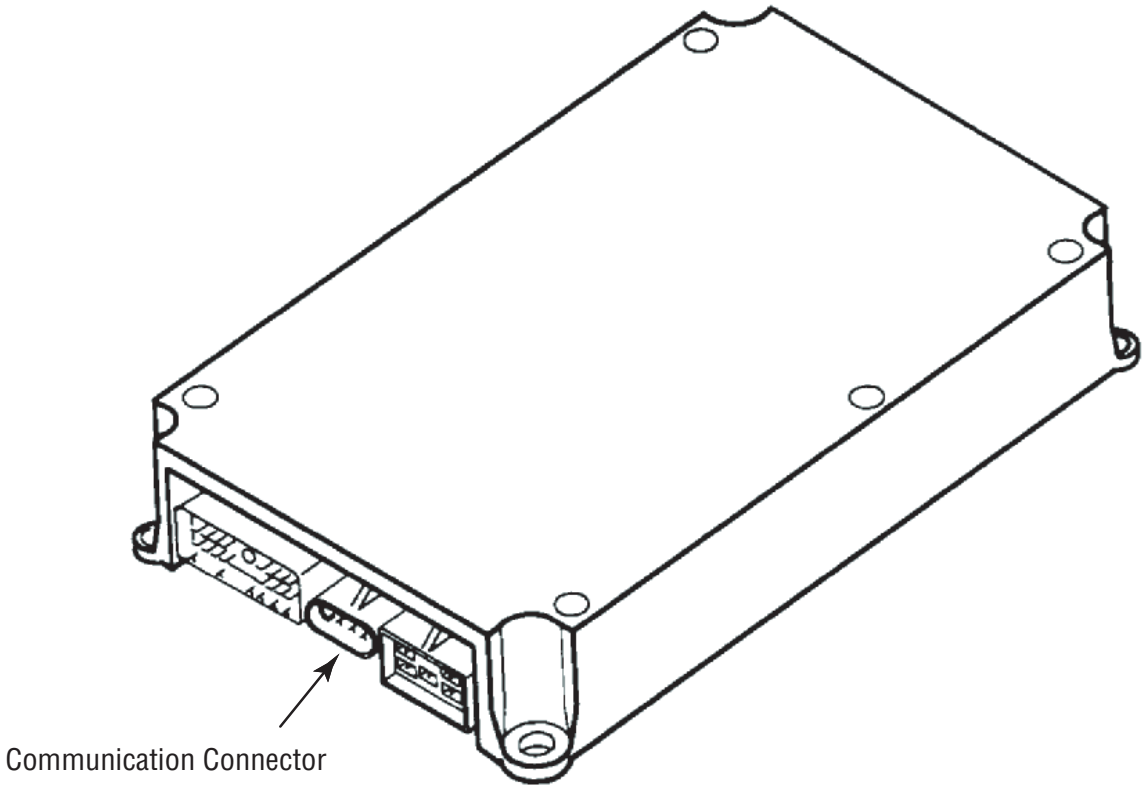

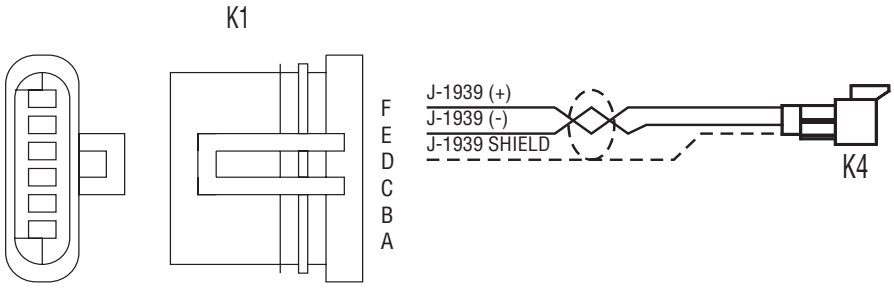

FROM	TO	DESCRIPTION
K1-F	K4-A	J-1939 High +
K1-E	K4-B	J-1939 Low -
K1-D	K4-C	J-1939 Shield

Location of the J-1939 Control Data Link on Cummins Engines

As a part of Cummins ECU Interface Harness, J-1939 3-pin Deutch connector will already be present. No additional connections are needed to connect the engine ECM to the J-1939 backbone.

Note: It may be necessary to extract the connector from behind a bracket located at the rear of the engine. Simply push the connector out from behind the bracket.

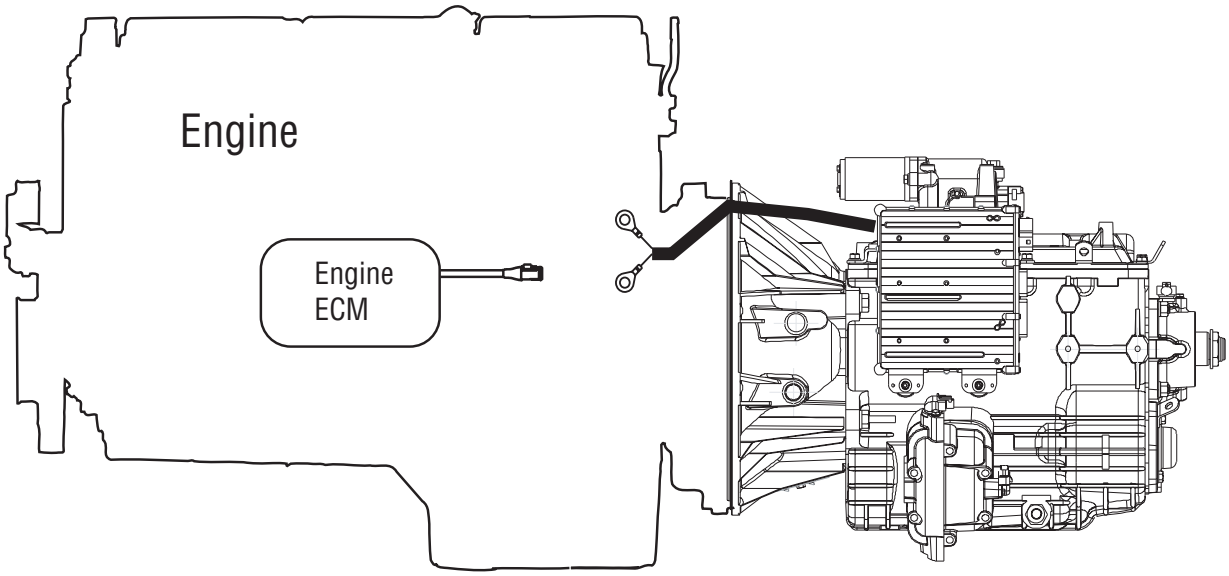

Typical System with Eaton Shift Lever

The dash area location is for the following:

- Start Enable Relay
- Gear Display
- Push Button Shift Control
- ATA Connector (J-1587 Link)
- Dimmer Control Input (V Dash)
- Ignition Power (VIGN)

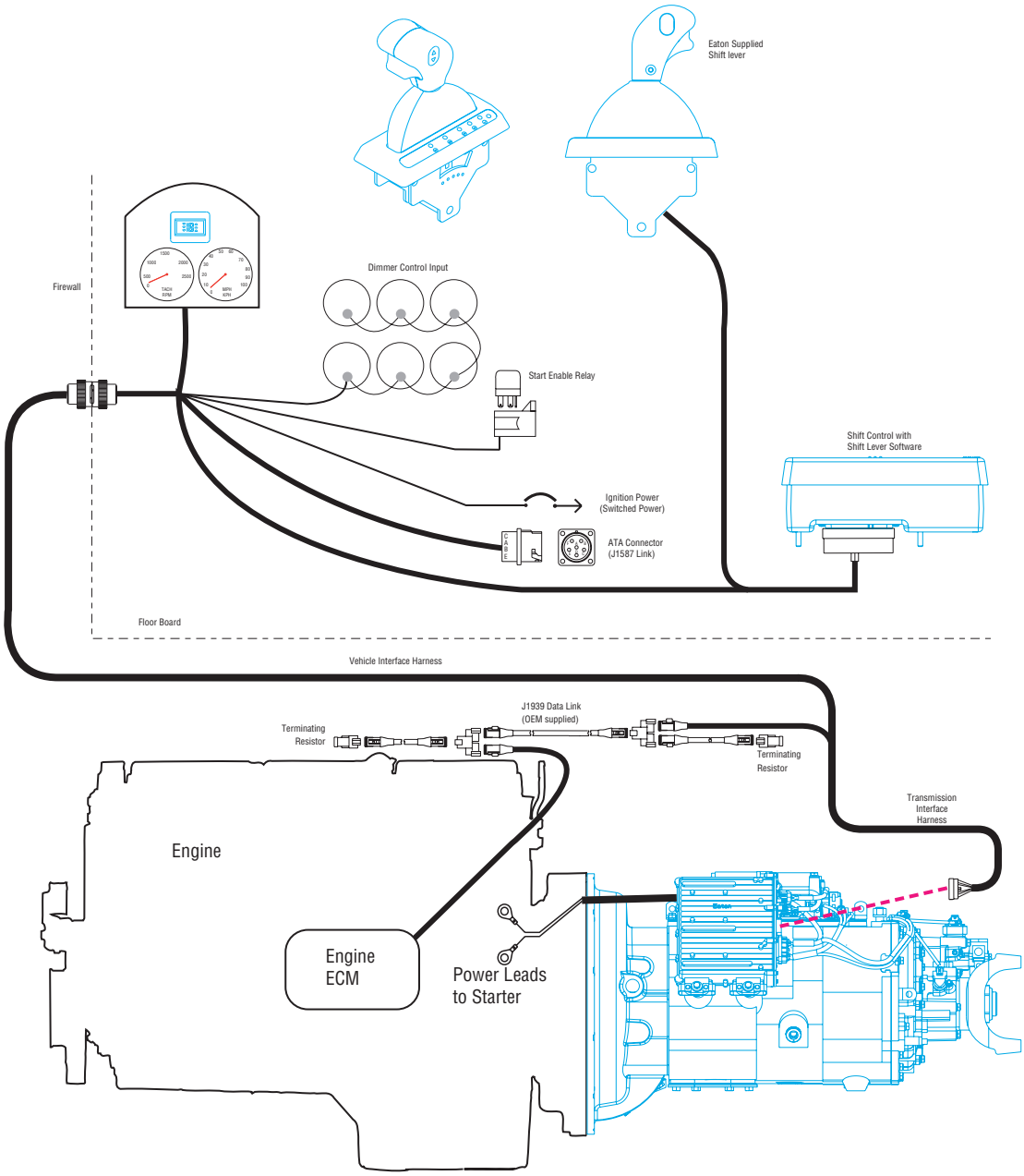

Shift Lever Detail

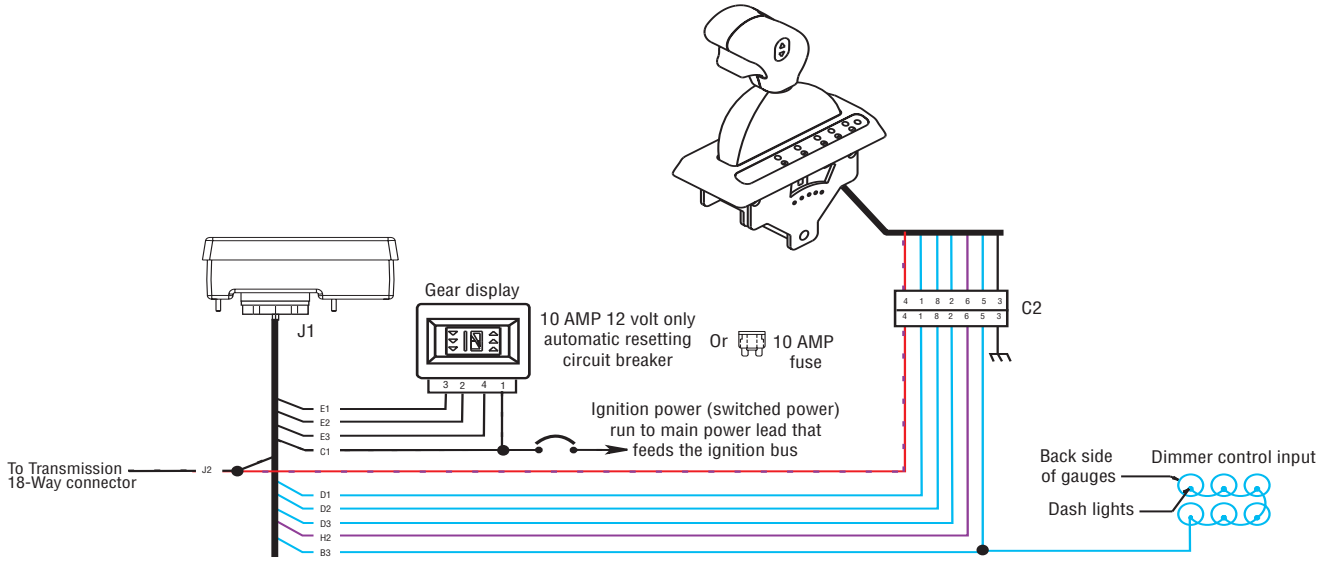

Shift Lever Legend

All OEM responsible wiring shown is "typical". Consult specific application.

(J2) = +12 volt switched from shift controler to shift lerver

(D1, D2, D3, B3) = Signals into the ECU

(3) = Signal returns, grounds, and general OEM wiring

(H2) = +12 volt signal from shift control to shift lever

FRONT VIEW

Shift Control (30-Way Connector) J1

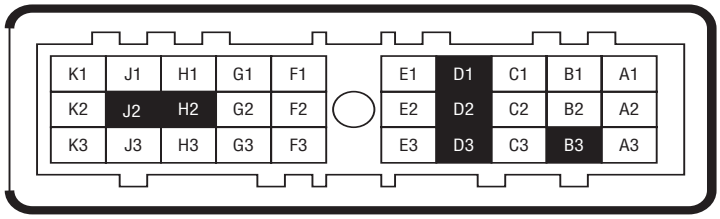

FROM	TO	DESCRIPTION
J1-D1	C2-1	RNDHL
J1-D3	C2-2	COMMON
---------	C2-3	GROUND
J1-J2	C2-4	SPLICE into TRANS BATT 1
J1-B3	C2-5	DIMMER CONTROL
J1-H2	C2-6	SERVICE LAMP
J1-D2	C2-8	MANUAL MODE

Shift Lever

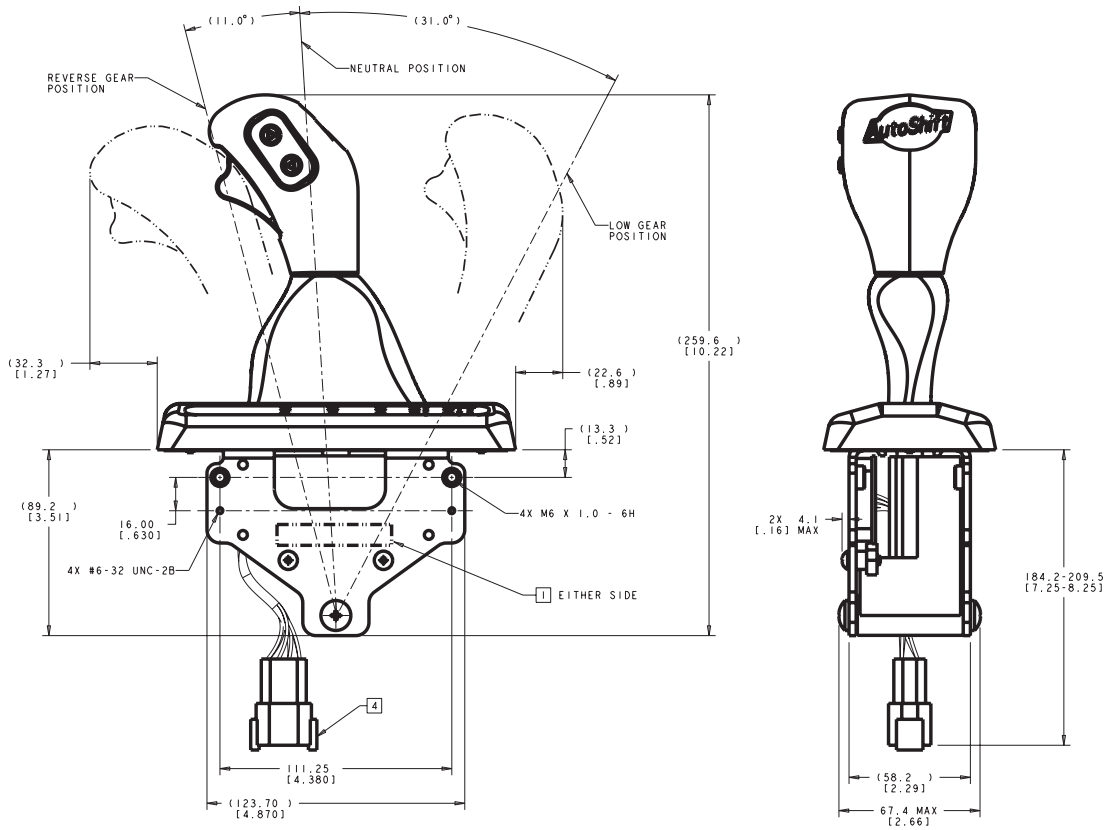

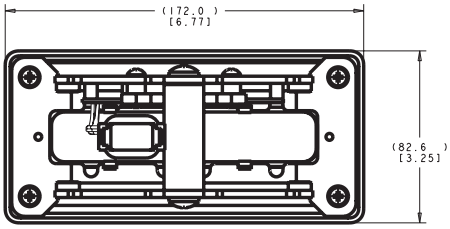

CONNECTOR INFORMATION

QTY	DEUTSCH PART NUMBER	DESCRIPTION
1	DTM04-08PA	HOUSING - RECEPTICLE
7	1060-20-0144	CONTACT - PIN
1	WM-8P	WEDGE LOCK
1	0413 -204-2005	CAVITY PLUG

Cobra Lever Pinouts/Dimensions

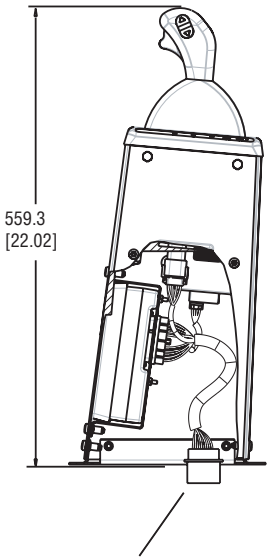

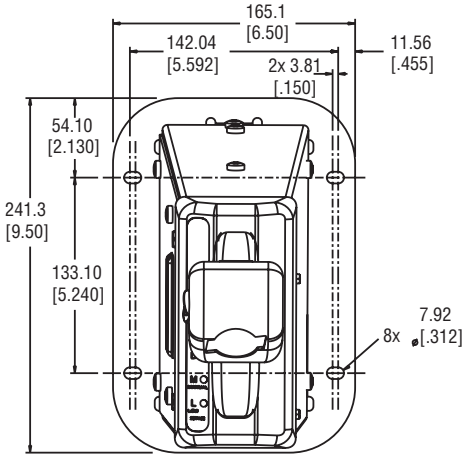

Mating Connector
Deutsch Connector
Connector Body: HDP24-24-31pt
Terminal: 0460-202-1631
Plug: 114017

CONNECTOR PINOUT

PIN NUMBER	DESCRIPTION		PIN NUMBER	DESCRIPTION
1	CLOCK +		17	EPL-SHIELD
2	DATA -		18	J-1587 -
3	PLUG		19	VIGN
4	DISPLAY POWER -		20	TRANS BATT 1
5	EPL +		21	DIMMER CONTROL
6	EPL -		22	VBATT 1
7	J-1587 +		23	GND 1
8	J-1939 +		24	PLUG
9	J-1939 -		25	PLUG
10	J-1939 SHIELD		26	PLUG
11	AUX-IN-RTN		27	PLUG
12	AUX-IN-SIG		28	GND 2
13	START ENABLE RELAY +		29	VBATT 2
14	START ENABLE RELAY -		30	PLUG
15	START ENABLE RELAY LATCH		31	TRANS BATT 2
16	PLUG			

Typical System with OEM Shift Lever

The dash area location is for the following:

- Start Enable Relay
- Gear Display
- Push Button Shift Control
- ATA connector (J-1587 Link)
- Dimmer Control Input (input)
- Ignition Power (VIGN)

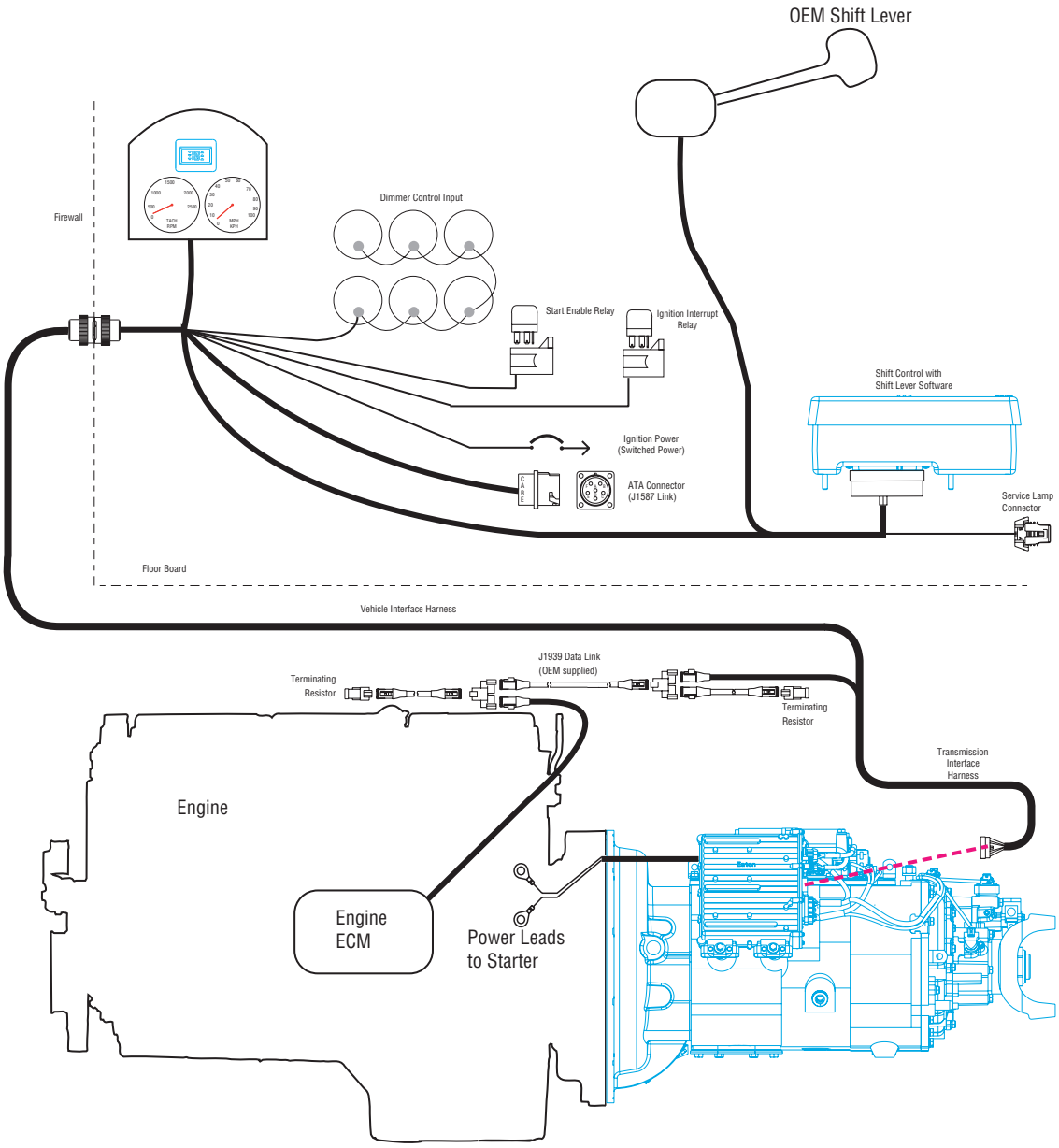

OEM Shift Lever Detail

OEM supplied Shift Lever must have gated positions per the Autoshift remote mounted Shift Lever and J-1587 display/OEM interface specification

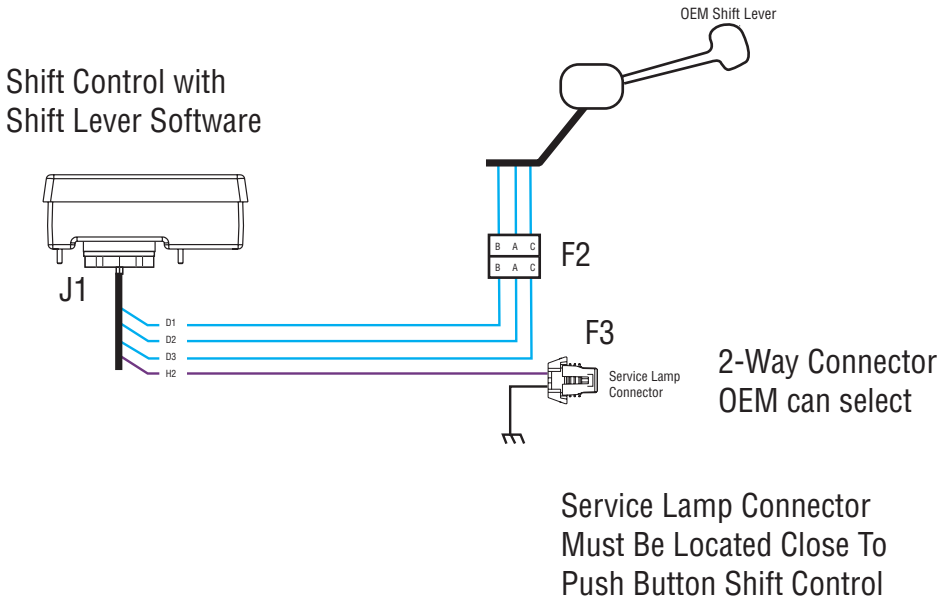

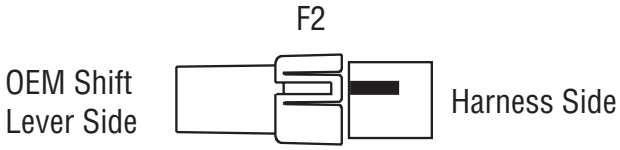

PACKARD

Connector	12047782
Secondary Lock	12047784
Terminal	12047581

PACKARD

Connector	12047781
Secondary Lock	12047783
Terminal	12047767

FROM	TO	DESCRIPTION
J1-D1	F2-B	RNDHL
J1-D2	F2-A	MANUAL MODE
J1-D3	F2-C	COMMON
J1-H2	F3-A	SERVICE LAMP
F3-B		GROUND

Body Builder Guide For Tapping into Electrical Systems

Body builder electrical systems that are to be interconnected with the AutoShift electrical system should adhere to the latest recommendations of SAE J1292. In addition to SAE J1292, the following recommendations should be followed.

1. All wiring terminals should be properly insulated to prevent “short circuits”. All terminals should be of insulation grip design to provide a reliable connection and to prevent terminal fatigue.
2. Terminals and splices that are connected outside the body should be moisture resistant design. Molded insulator for ring terminals should be used. Molded connector/insulators are recommended for use with blade or pin type terminals.
3. Wires must be routed to provide at least 75 mm [3.0”] clearance to moving parts, unless positively fastened or protected by conduit.
4. Wire routing should avoid areas where temperatures exceed 80° C [180° F] and a minimum clearance of 100 mm [4.0”] should be maintained from exhaust system components. Where compliance with this requirement is not possible, heat insulation and heat shields are required.
5. Wire routing and component mounting (switches, relays, etc.) should be located to be easily removed for service. Do not surround the components with body structure that will prevent removal for service.
6. Wiring to all circuit components (switches, relays, etc.) in exposed locations shall provide a drip loop to prevent moisture from being conducted into the device via the wire connection.
7. Routing wiring into wheel splash areas should be avoided. When such routing cannot be avoided, adequate clipping or protective shielding is required to protect wiring from stone and ice damage.
8. Routing wires under the frame side-members or at points lower than the bottom frame flange should be avoided to prevent damage to the wires in off-road operations.
9. The wire retainers and grommets installed by the assembly plant are designed to accommodate only the OEM installed wires. Additional wiring or tubing must be retained by additional clips. When added wires to tubes are routed through sheet metal panels, new holes must be used (with adequate wire protection and sealing).
10. All wiring connections to components of the factory-installed system must be accomplished by using the correct mating wire termination. (Connections on studs and ground connections must use ring type terminations).
11. When it is necessary to splice wires, the splice must be adequately crimped to provide a good mechanical and electrical connection. Double wall heat shrink tubing should be used where the outer wall will provide adequate electrical insulation and the inner wall melts and seals the splice from the environment.
12. **Never add another circuit or splice to the AutoShift ignition or battery power supplies.**
13. Fuse recommended to protect wire. Manual circuit breaker acceptable. **Auto reset breakers are not acceptable.**
14. **Never puncture cable insulation with a probe to verify voltage or to check continuity**.
15. Do not use contact lubricant or grease on Duetsch connectors. Lubricate is used only on tin plated contacts.
16. Exposed ring terminals should be protected from the environment. Dielectric grease is recommended to prevent corrosion.

Body Builder Guide For Tapping into Electrical Systems, Cont.

The fuses and circuit breakers installed at the assembly plant are designed to protect the wiring and electrical components from overloads. Never remove a factory installed fuse or circuit breaker and replace it with a high value device. If the added electrical device causes “fuse blow”, or circuit breaker cycling, it indicates the total load is too high for the factory installed circuit protection and requires revisions in the added circuit: not fuse or circuit breaker size.

In this case, the items to be added cannot be added directly to the circuit, but must be connected through a separate hang-on switch or relay of the correct capacity, using added wiring of the correct gauge. Failure to adopt this precaution will lead to switch contacts burning. The following wire table suggest wire gauges for various maximum current draws and will aid in the selection of the correct wire size. The current capacity of a given wire varies with temperature and type of insulation, but the following values are generally acceptable.

If the total electrical load on the circuit, after the addition of electrical equipment, is less than the fuse protection in that circuit or less than the capacity of some limiting component (switch, relay, etc.), the items to be added can be connected directly to that circuit. The connection points and allowable loads are normally found in the owners manual. However, you may want to contact the OEM. Never add another circuit into the transmission ignition or battery supplies.

Wire Gauge	**Maximum Current Capacity (Crosslink Polyethylene Copper Wire)**
20	14 Amps
18	18 Amps
16	24 Amps
14	34 Amps
12	42 Amps
10	58 Amps
8	80 Amps
6	110 Amps

Outside Cab Features

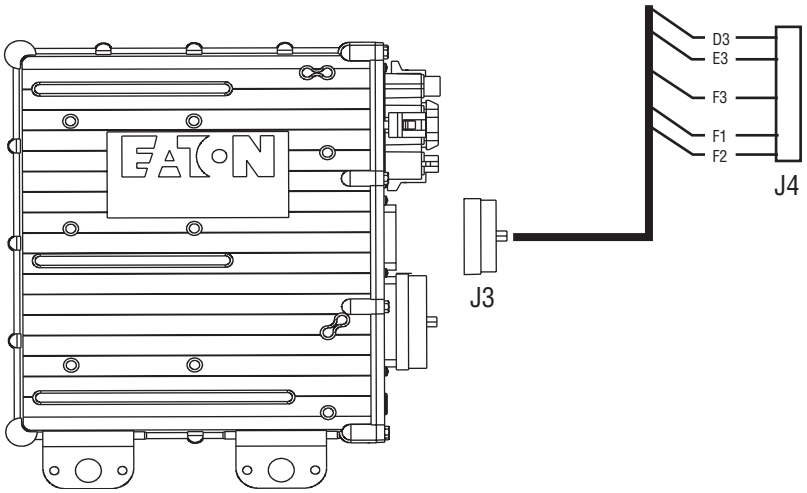

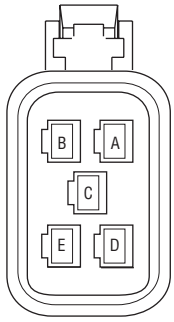

PACKARD
Body 12129325
Terminal 12077411
Lock 12015323

Interconnection Table

FROM	TO	Description
J3-D3	J4-A	Aux 1 Input
J3-E3	J4-B	Aux 1 Input (Return)
J3-F3	J4-C	Aux 1 Output (Lo side)
J3-F1	J4-D	PTO Input
J3-F2	J4-E	PTO Input (Return)

Power Take-Off “Split shaft”

PTO input must be a normally open switch. The switch must close to ground whenever the PTO is activated. This input (active when pin F1 is shorted to ground) activates the split shaft PTO mode of the transmission. This feature uses pin F1 of the 18-way transmission connector.

The active signal will illuminate the “Mode” indicator on the push button console when the transmission direct drive gear is engaged for split shaft PTO operation.

The transmission default mode for the pin F1 input is for countershaft PTO operation, if split shaft PTO operation is desired, the PC based service tool, ServiceRanger, must be used to enable split shaft PTO feature.

The input signal wire for the PTO must be isolated from other PTO related circuits.

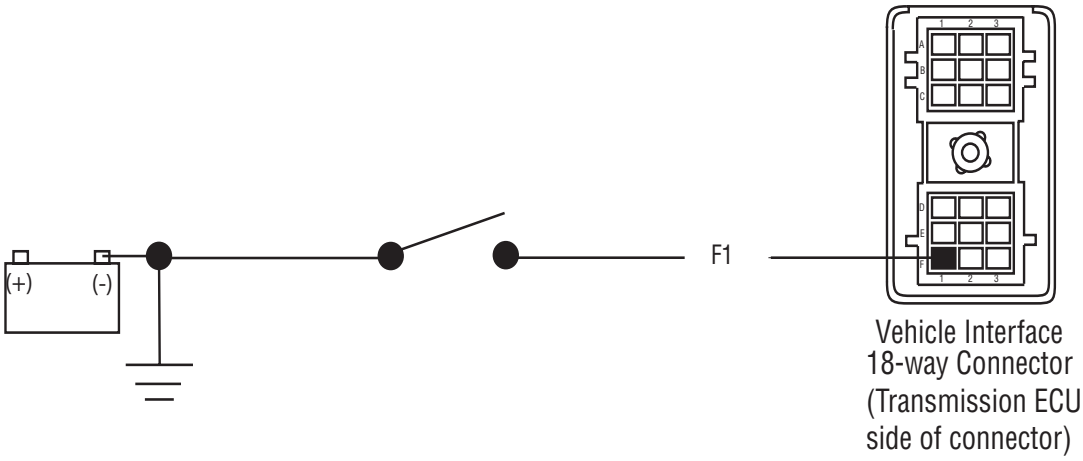

NOTE: The input signal wire for the PTO must be isolated from other PTO related circuits

NOTE: The ground connection must be isolated from local power device ground returns. Frame rail ground is not recommended.

Power Take-Off “Countershaft driven”

PTO input must be a normally open switch. The switch must close to ground whenever the PTO is activated. This input (active when pin F1 is shorted to ground) activates the countershaft PTO mode of the transmission. This feature uses pin F1 of the 18-way transmission connector.

The active signal will illuminate the “Mode” indicator on the push button console.

The transmission default mode for the pin F1 input is for countershaft PTO operation. If the push button console is programmed for something other than countershaft PTO operation the PC based service tool, ServiceRanger, must be used to enable the countershaft PTO feature.

The input signal wire for the PTO must be isolated from other PTO related circuits.

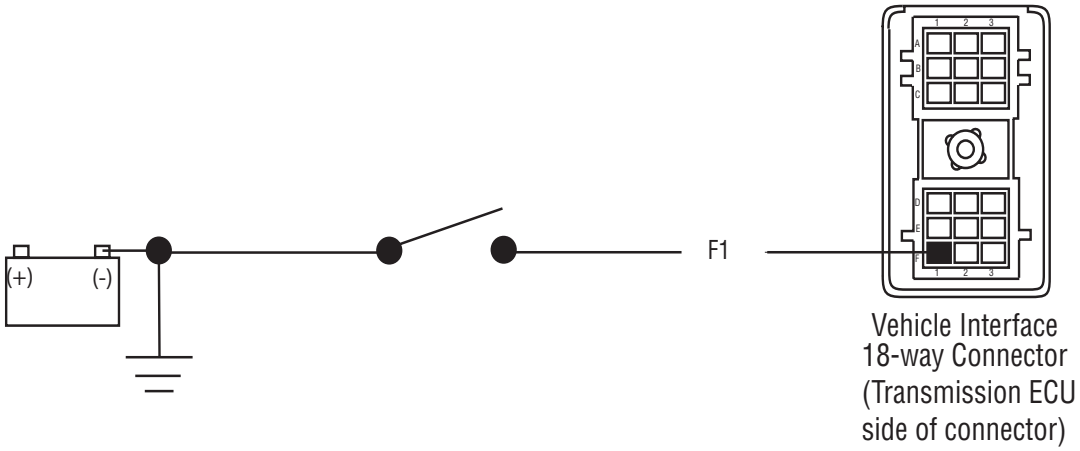

NOTE: The input signal wire for the PTO must be isolated from other PTO related circuits

NOTE: The ground connection must be isolated from local power device ground returns. Frame rail ground is not recommended.

Line Inspection and Road Test Instructions

This checklist was developed as an installation tool for line personnel to ensure the correct operation of each vehicle and to assist the vehicle OEM to identify transmission quality related issues as well as OEM line quality issues. Used correctly, this checklist identifies transmission issues and aids in tracking the problem until corrected.

The recommended use of the checklist is as follows:

1. A separate checklist should be filled out for each vehicle built with Eaton Fuller transmissions. If these checks and information can be combined with an existing form, the Line Inspection form does not need to be used.
2. The section identified as PRE-START CHECKS should be performed prior to the initial start-up of the vehicle. This section ensures the transmission has the correct power supplies, sufficient lubricant, and correct transmission shift tables.
3. Perform any necessary corrective action prior to the dyno or road testing.
4. The DYNO/ROAD TEST section is used to verify that all transmission systems are functional, the clutch is adjusted properly, and the driver information is supplied in the cab.
5. With a record of transmission related information and repairs made to each unit, the OEM is able to track and correct repeated quality issues.
6. A copy of the checklist should be recorded for installation history. OEM line personnel should become familiar with the checklist for the transmission prior to a scheduled build. Eaton OEM Engineering Support Group can coordinate training and information to expedite this process.

This checklist represents a generic system which can be tailored to the individual OEM to achieve the best possible method of transmission installation verification. Eaton recommends the use of this system to maintain the utmost in satisfactory operation and long service life.

Each transmission system installed at the OEM must pass the line checklist requirements per the Eaton Line Inspection Form prior to shipment from the OEM plant.

Line Inspection

WARNING

This transmission is equipped with a neutral interlock system that when properly installed prevents the engine from starting with the transmission in-gear.

Failure to perform installation pre-start checks may result in the engine cranking immediately when ignition is moved to the "START" position or to the "ON" position.

To prevent undesired vehicle movement for new installations, always set the parking brakeand depress the master clutch pedal fully prior to turning the ignition key "ON" and also prior to attempting "START".

Depress the master clutch pedal fully and set parking brakes before starting engine.

If gear display fails to stop flashing after 5 seconds, turn key off and check clutch adjustment.

Checklist Instructions

Refer to the line inspection form while performing the following procedure.

Note: All information must be filled in at form top.

Pre-Start Checks

1. Visually verify that the transmission ignition power supply is protected by anauto resetting 10 amp/12 VDC circuit breaker of fuse and verify that main power is protected by a 30 amp/12 VDC fuse.
2. Verify polarity of main power connection.
3. Verify the transmission has been filled with the correct amount and type of lubricant before starting the engine. Failure to add sufficient lubricant could damage the transmission. Use Roadranger CD 50. See Lubricant Requirement section in this manual for details.
4. Turn the key switch to the "On" position and visually observe the power up procedure. Gear Display will show a solid "N" when power up is complete.

Note: The transmission will automatically reset to neutral position as soon as the vehicle is powered up (key switch on).

WARNING

Improper installation of the OEM Start Enable Circuit could result in enabling the vehicle to be started in gear.

Note: UltraShift equipped vehicles with programmable VSS Tamper Resistance options or other artificial engine speed limits which prevent reaching the required 1500 rpm may prevent proper disengagement of the clutch locking device after initial installation. These options may need to be disabled until after the clutch locking device is disengaged.

Dyno/Road Test

1. With engine not running, select drive and attempt to start the engine. Repeat for each of the forward and reverse mode positions to verify the engine will not start.
2. Verify all forward and reverse gears are obtained.
3. AutoShift equipped trucks, verify correct clutch adjustment and correct pedal free travel per clutch manufacturer's specifications.
4. Verify through normal operations that the temperature gauge (if installed) is functional.
5. Visually verify that the gear display module is easily visible and lights up when the ignition is turned on.

Note: When testing on a dynamometer which decelerates quickly, the display module may not appear to function correctly. Should this occur, drive the vehicle off the dynamometer and note how the display functions. If it functions correctly when driving, the problem is that the dynamometer decelerates too quickly.

6. Verify through normal operation that the engine brake (if equipped) functions correctly per the manufacturer's specifications.
7. Verify that the panel lights on the Shift Control illuminate when the vehicle dash lights are turned on.
8. Visually check for lubricant drips or residue on the transmission and related cooler lines (if used).
9. Make sure the correct transmission dash label is present and that the driver's instruction booklet is included with the other vehicle information.
10. Verify that the transmission diagnostic port (SAE J-1587) is accessible, either mounted on the dash left side or under the dash left side.
11. Verify that a label to alert the customer of type and brand of lubricant used in the transmission is attached to the transmission or included with the other vehicle information.
12. Clear historical fault codes by using the key switch. To do this, place the Shift Lever in neutral and set the parking brakes. Begin with the switch in the on position. Turn the key off and back on six times within five seconds (off/on/off/on/off/on/off/on/off/on/off/on).

Line Inspection Form “AutoShift”

AutoShift™ Generation 2	OEM:
	Chassis S/N:
Line Inspection	Trans Model: Trans S/N:
	Clutch Size/Type:
	Shift Control S/N:

	Description	Yes	No	Corrected
Pre-Start Checks				
1.	Power Supply check:			
	Ignition Bus Check: Does service light turn on and tone sound on shift control?			
2.	Circuit Breaker / Fuse min. 10 amp/12 VDC Ignition Bus (manual reset type) or fuse min. 30 amp/12VDC Main Power Fuse			
3.	Oil Fill (see lubricant section for details)			
DYNO/Road Test Checks				
4.	Verify that engine does not start with transmission in gear			
5.	Correct clutch free travel and adjustment- see OEM clutch literature			
6	All forward and reverse gears obtained with engine control			
7.	Verify transmission temperature gauge is functional - if equipped			
8.	Verify gear display module (DDM) works correctly			
9.	Shift Control panel lights functional			
10.	Verify no transmission oil leaks			
11.	Transmission diagnostic port accessible			
12.	Lubricant type and brand label affixed to vehicle			
13.	Clear Fault Codes and Verify J-1587 Diagnostic Connector works			

Comments:

Final Inspection Date:

Signature:

Please send copy to: Eaton Corp, P.O. Box 4013, Galesburg, MI 49003 ATTN: Engineering Support Group

Troubleshooting

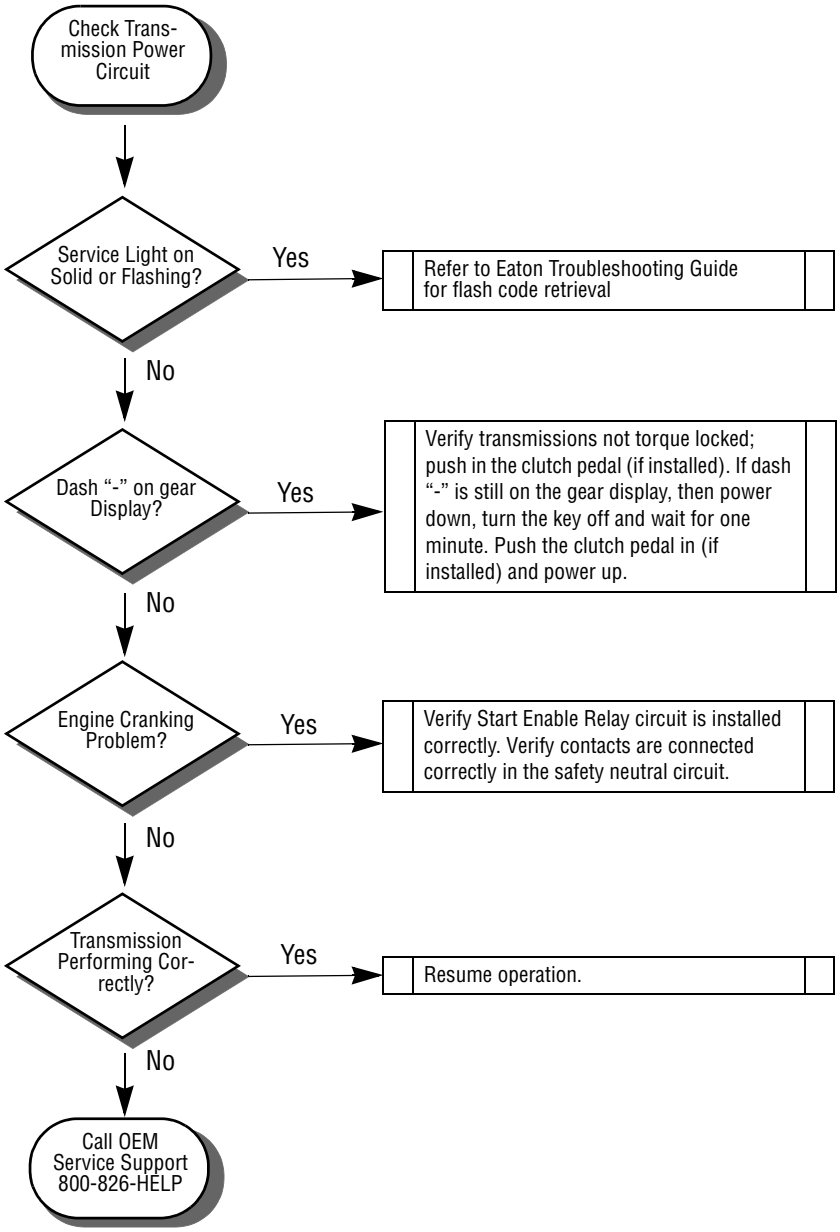

Typical System Overview (Tower Mounted)

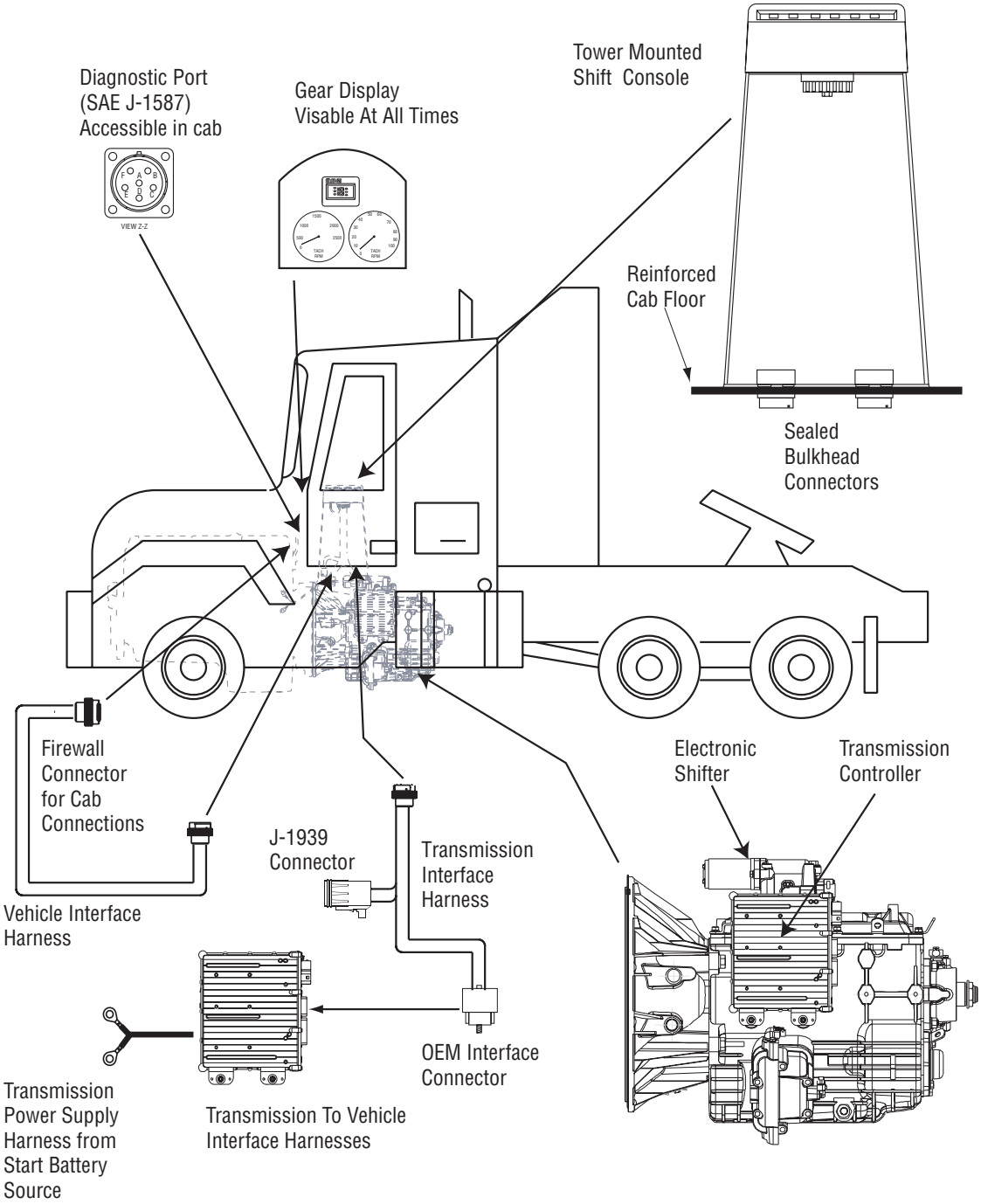

Typical System Overview (Dash Mounted)

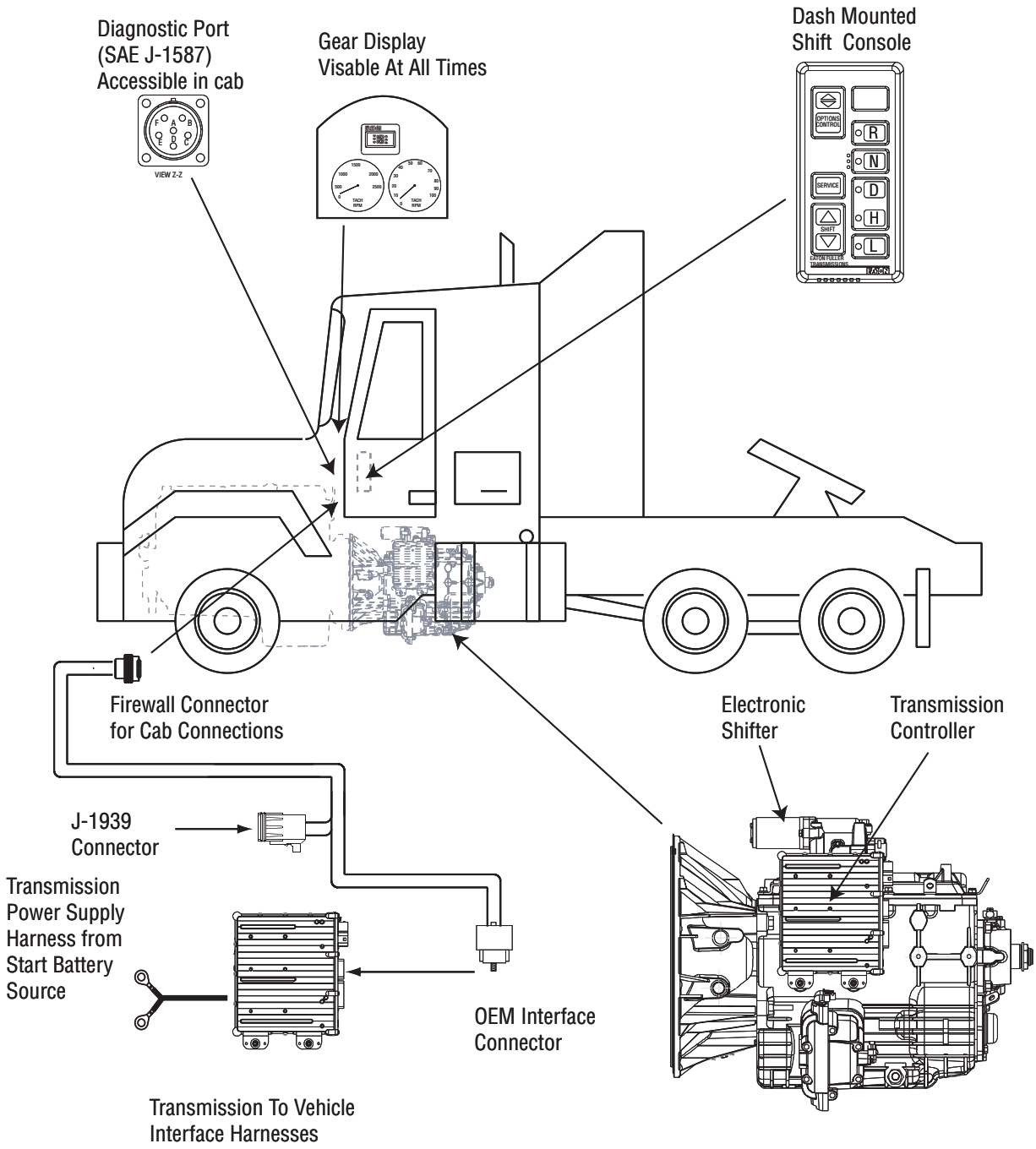

6-Speed Lifting Eyes and Sensor Position (Fx-8406x-ASX)

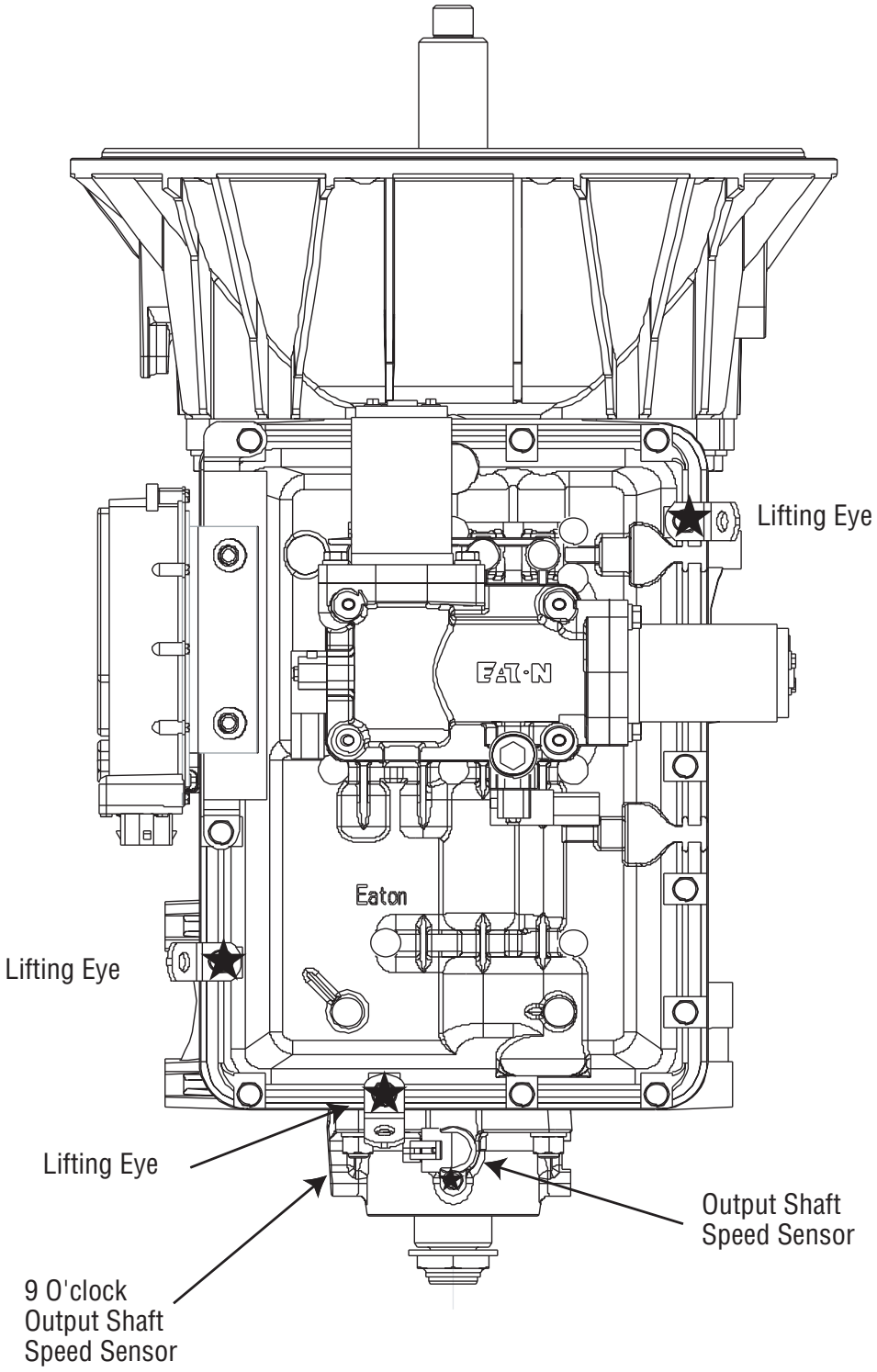

7-Speed Lifting Eyes and Sensor Position (TO-xx607B-ASX)

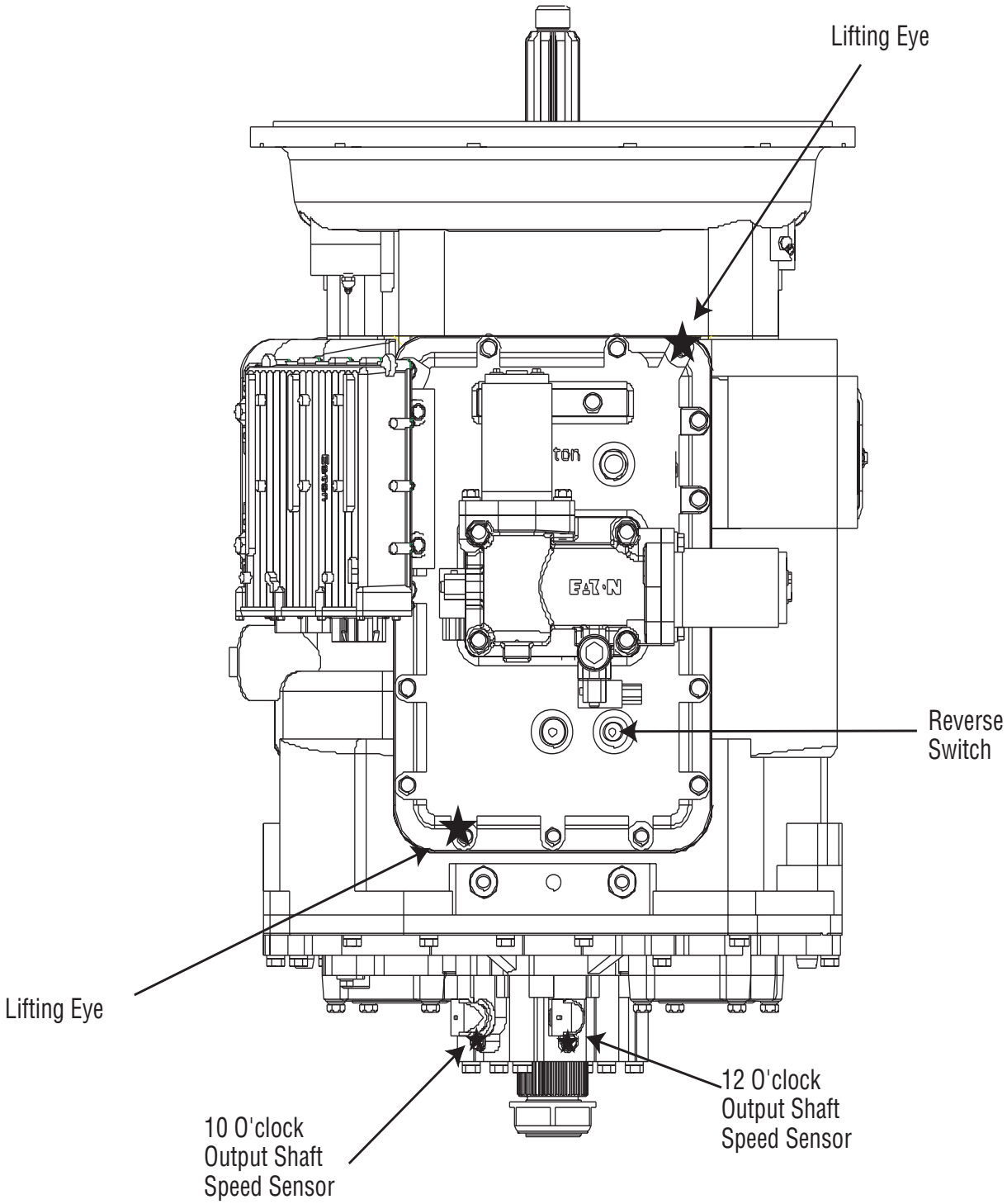

10-Speed Lifting Eyes and Sensor Position (RTO-xx710x-AS2)

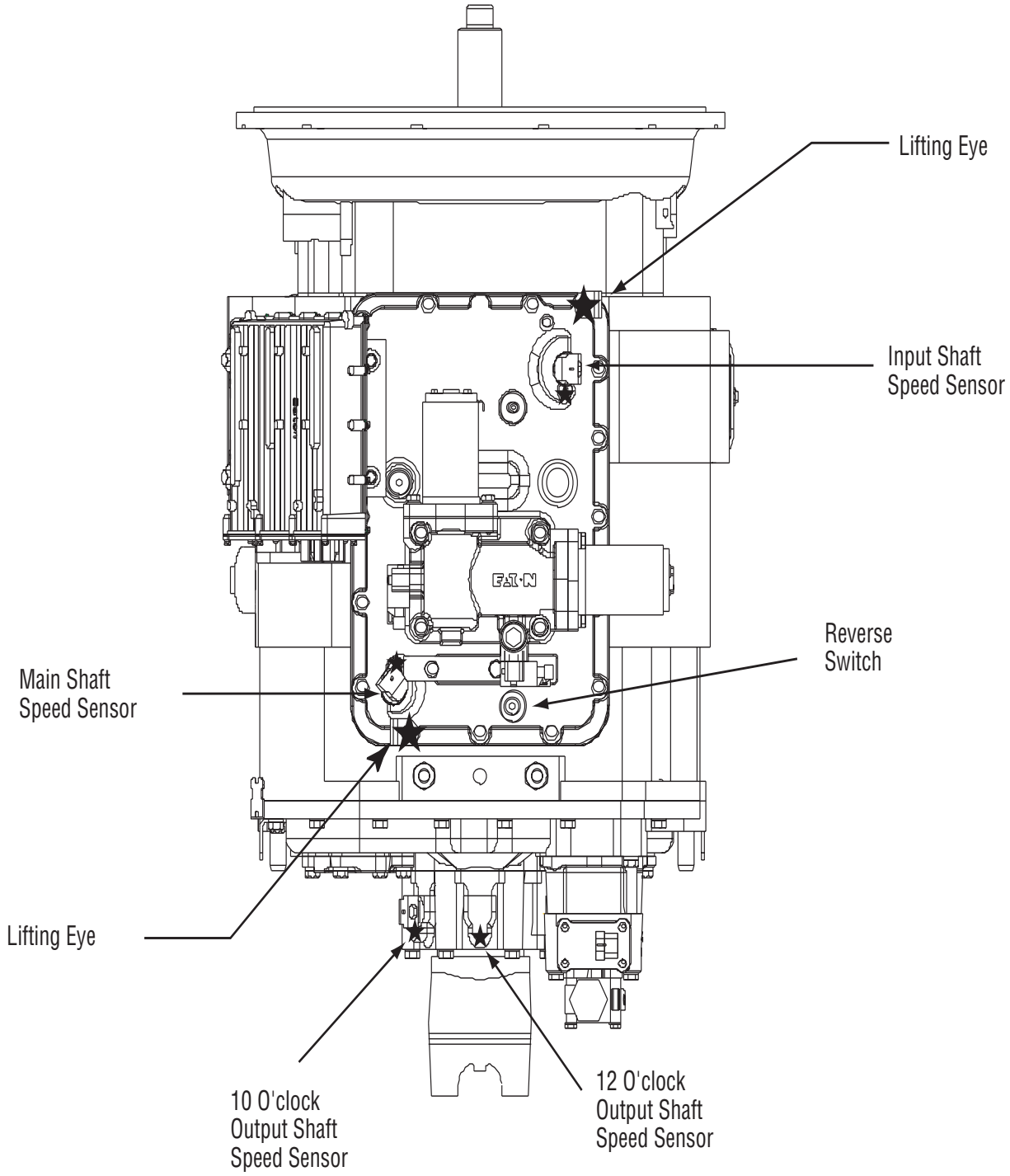

18-Speed Lifting Eyes and Sensor Position (RTLO-xx918x-AS2)

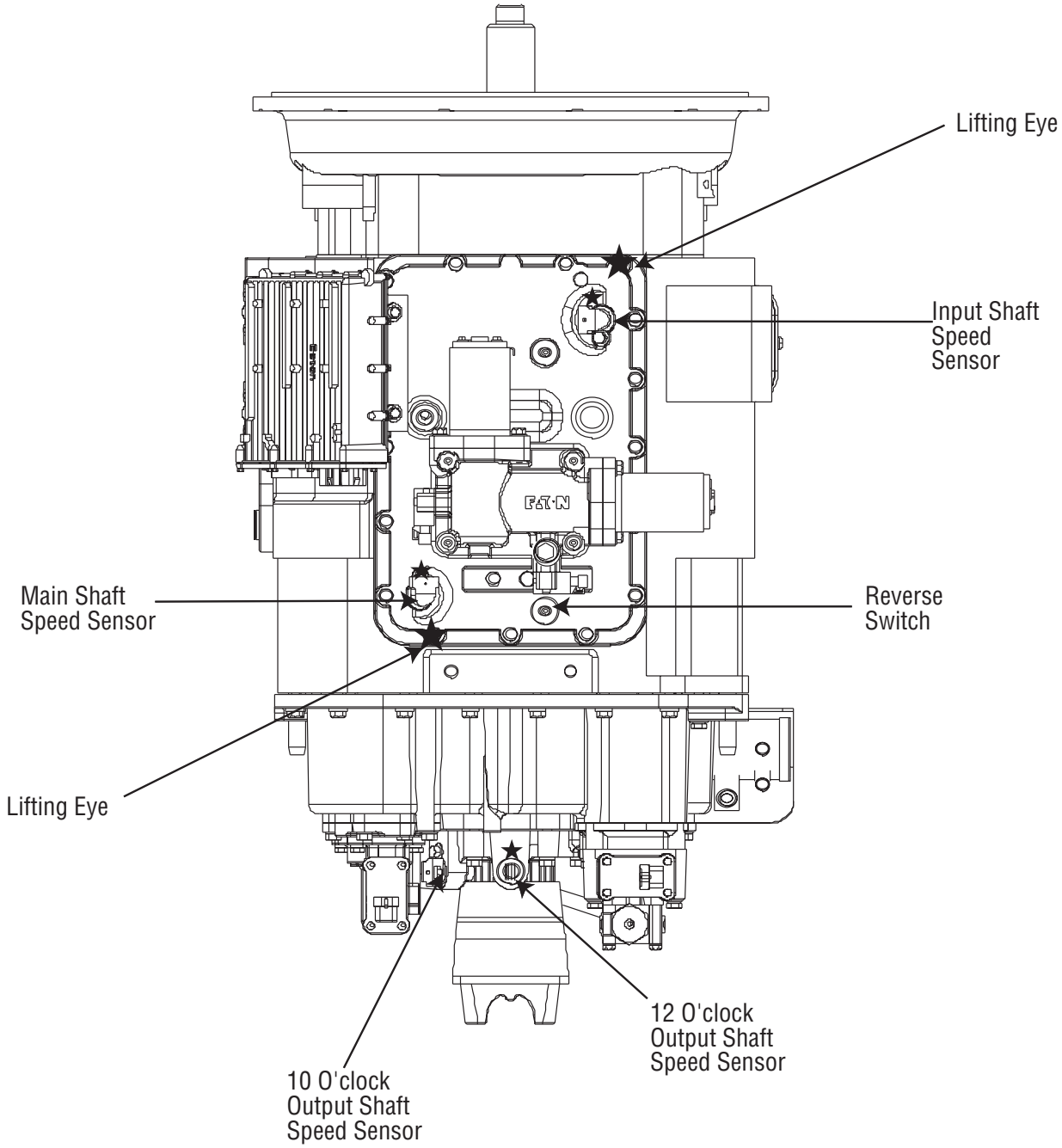

Vendor List

AMP Incorporated

(Connectors)
P.O.Box 3608
Harrisburg, PA 17105-3608
1-800-522-6752
Fax (727) 986-3611
www.amp.com

BELDEN WIRE AND CABLE

(HIL and J-1939 Cable)
P.O. Box 1980
Richmond, IN 47375
(317) 983-5200
Fax (765) 983-5294
www.Belden.com

BRAND-REX CO.

(J-1939 Cable)
300 Brickston Square
Andover, MA 01801
(978) 933-5100
www.brand-rex.com

CHAMPLAIN CABLE CO.

(J-1939 Cable)
12 Hercules Dr.
Colchester, VT 05446
(802) 655-2121
Fax (802) 654-4224
www.champcable.com

DEUTSCH

(Connectors)
Industrial Products Division
37140 Industrial Ave.
Hemet, CA 92545
(909) 765-2250
Fax (909) 765-2255
www.deutschipd.com
www.laddinc.com (Ladd Industries)

PACKARD Electric

(Connectors)
Pioneer-Standard Electronics, Inc.
Packard Branch
5440 Naiman Parkway
Solon, OH 44139
1-800-PARKARD (722-5273)
Fax (219) 378-6650
www.delphiconnect.com

RAYCHEM

(Wire)
Electronics OEM Components Division
300 Construction Drive
Menlo Park, CA 94025-1164
1-800-260-9909
Fax United States (800) 260-9999
Fax Worldwide (650) 361-5579
www.raychem.com

ROBERT BOSCH CORPORATION

(Relays)
2800 South 25th Avenue
Broadview, IL 60153
(708) 865-5301
Fax (708) 865-5203
www.bosch.de

Quick Reference

Engine Section

Clutch Requirement

Power assisted clutch release system is required for all rear engine coach applications.

Adjustment free clutches are required for all 6, 7, 10, and 18-Speed applications.

Transmission Mounting

Space requirements for transmission mounted electronics are 5” from any high temperature devices (i.e. Exhaust Crossover Pipes).

6-Speed and 7-Speed (TO-11607B-ASX) mounts to standard #2 clutch housing, same as standard mechanical boxes.

7-Speed (TO-14607B-ASX), 10-Speed, and 13/18-Speed mounts to a standard #1 engine flywheel housing, same as standard mechanical boxes.

Check clutch arm to Transmission Controller interface clearence during installation, clutch arm removal may be required in the future.

Transmission shipped in-gear for input shaft to clutch alignment.

Transmission prop shaft installation - axles must rotate to allow indexing of attachment hardware.

Eaton approved oil cooler required for all 18-Speed transmissions and for 13 and 10-Speed transmissions see lube requirement section.

Chassis Section

Electronic vehicle speedometer must be used.

Transmission Lubricant - Eaton Roadranger CD50 or equivalent synthetic required.

Vehicle air dryer required for 10,and 18-Speed transmissions.

Electrical Section

Electrical Dual Power required

Main Power and ground must be connected to reliable power and ground source.

OEM to supply main vehicle harness (Dash to Shift Control) and transmission interface harness (Transmission Controller to Shift Control).

Diagnostic Connector Required

J-1587 diagnostic connector mounted in or under dash on left side of cab.

J-1939 Data Link

OEM must supply J-1939 backbone harness.

Cab Section

Shift Control Requirements

Shift Control installation per Eaton approval.

Wire harness routing per Eaton approval.

OEM is responsible for rigidly mounting the Shift Control pedestal.

Access plate on the floor board is easily removable.

Sealed connectors required at shift control pedestal on conventional cabs.

Gear Display and Tone Module Supplied by Eaton

Digital display mounts in dash to provide driver information.

6-Speed Medium Duty AS and 7-Speed Wiring Diagram

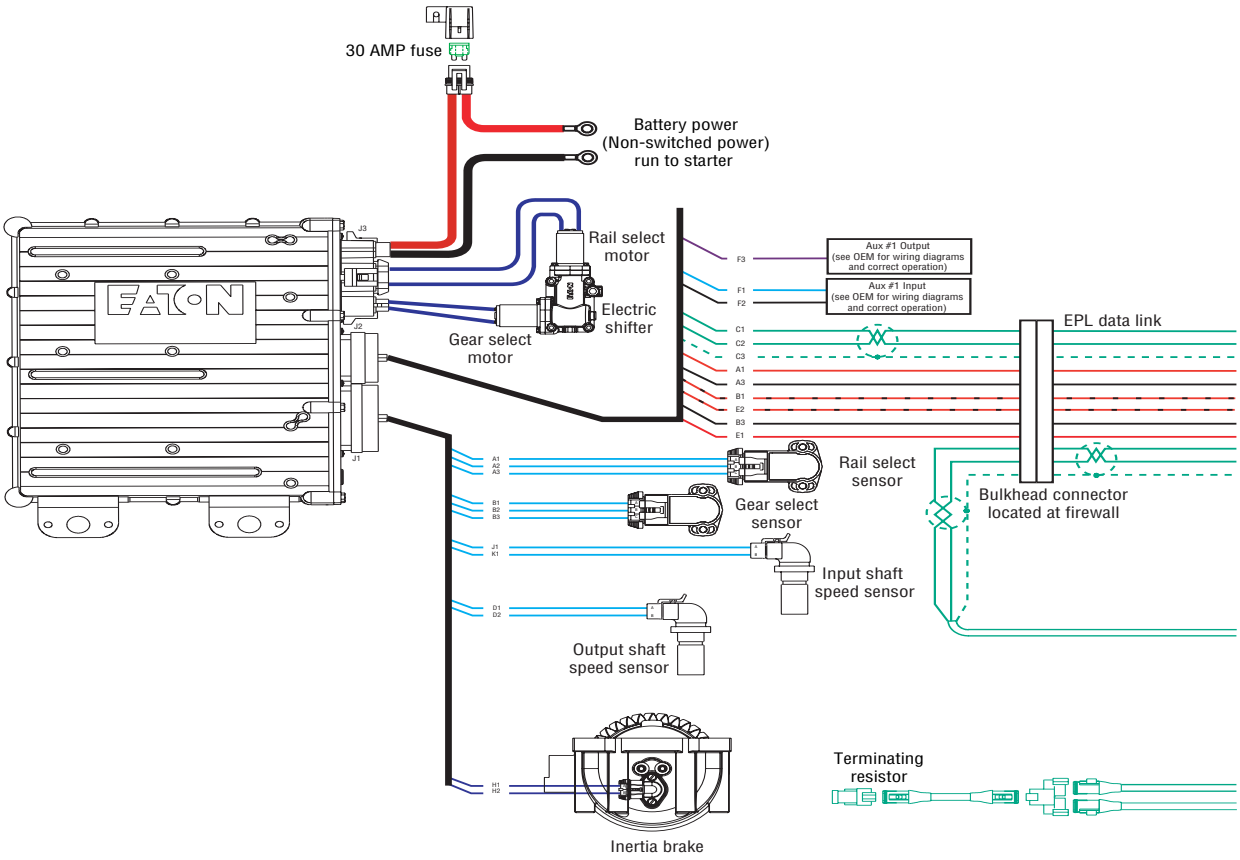

Trans ECU Legend

All OEM responsible wiring shown is "typical". Consult specific application.

(A1, E1) = +12 volt non-switched from battery

(B1, E2) = +12 volt switched from shift control to transmission controller

(F1) = Signals into the ECU

(C1, C2, C3, J-1939) = Communication from and to the ECU

(F2, A3, B3) = Signal returns, grounds, and general OEM wiring

(F3) = Aux output 1

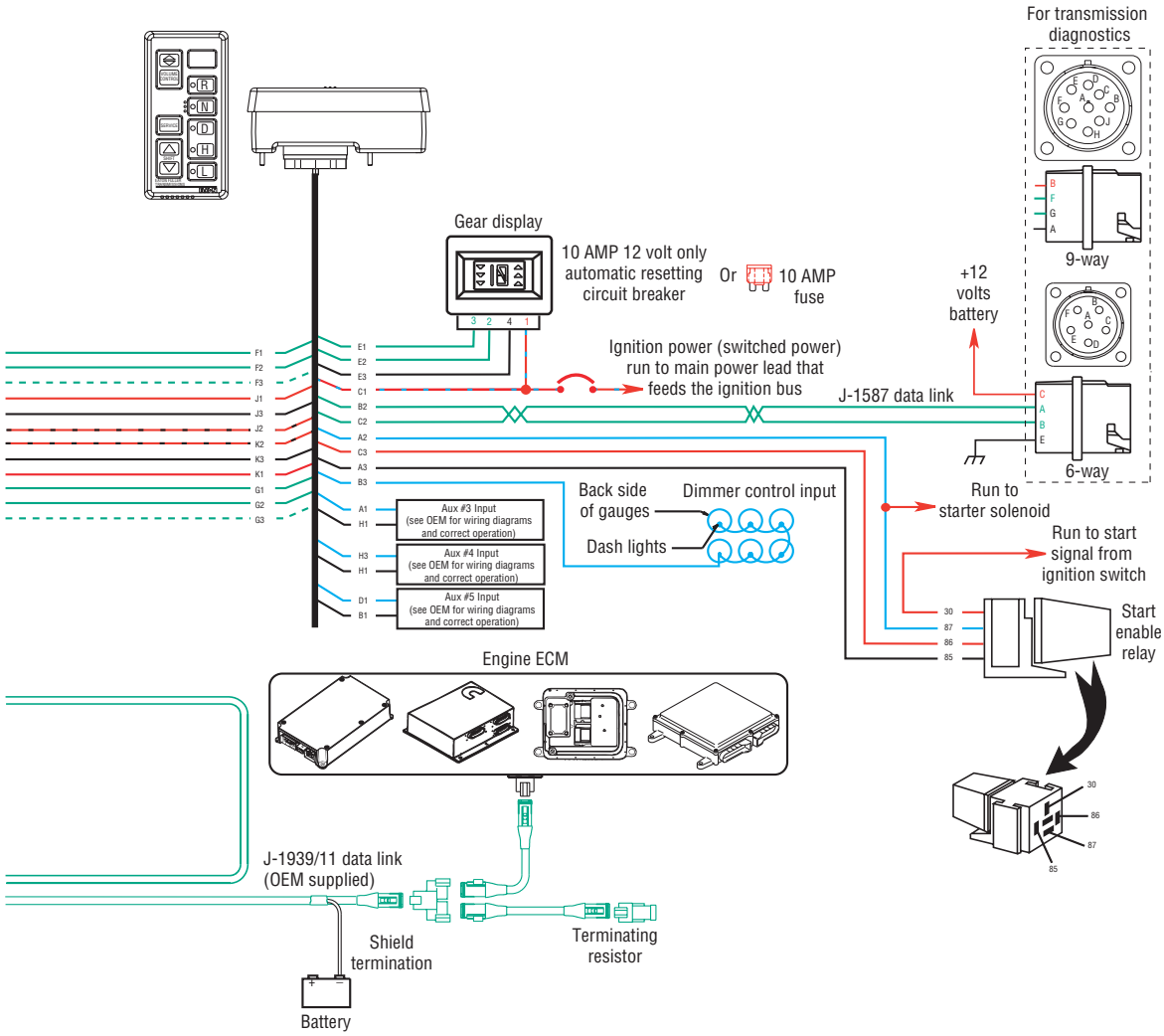

Shift Control ECU Legend

All OEM responsible wiring shown is "typical". Consult specific application.

(J1, K1, 30, Run to Solenoid) = +12 volt non-switched from battery

(J2, K2) = +12 volt switched from shift control to transmission controller

(C1) = +12 volt switched from ignition switch

(A2-87, B3, A1, H3, D1) = Signals into the ECU

(F1, F2, F3, G1, G2, G3, E1, E2, B2, C2, J-1939) = Communication from and to the ECU

(J3, K3, E3, H1, B1) = Signal returns, grounds, and general OEM wiring

(A3-85) = -12 volt relay source

(C3-86) = +12 volt relay source

10-Speed Wiring Diagram

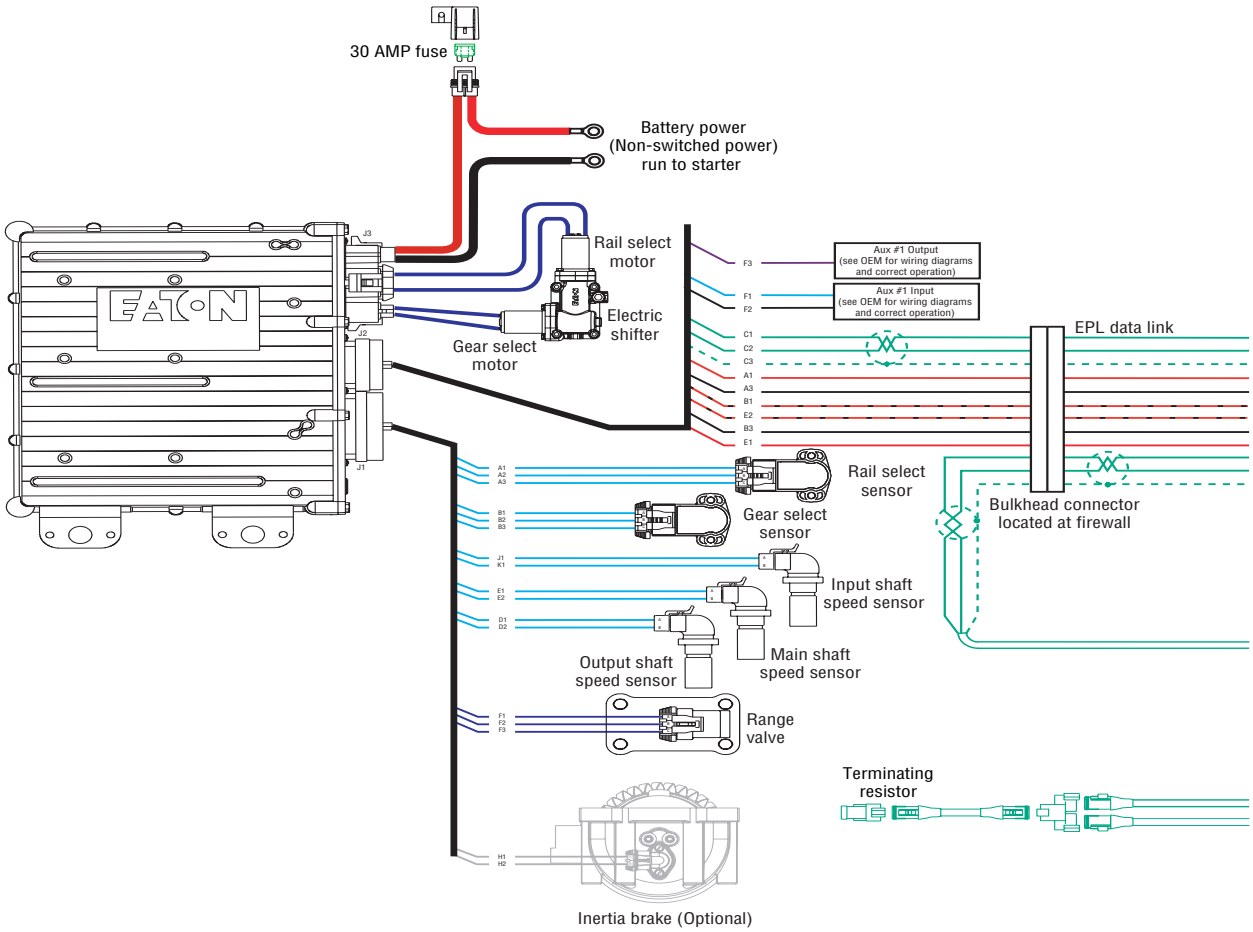

Trans ECU Legend

All OEM responsible wiring shown is "typical". Consult specific application.

(A1, E1) = +12 volt non-switched from battery

(B1, E2) = +12 volt switched from shift control to transmission controller

(F1) = Signals into the ECU

(C1, C2, C3, J-1939) = Communication from and to the ECU

(F2, A3, B3) = Signal returns, grounds, and general OEM wiring

(F3) = Aux output 1

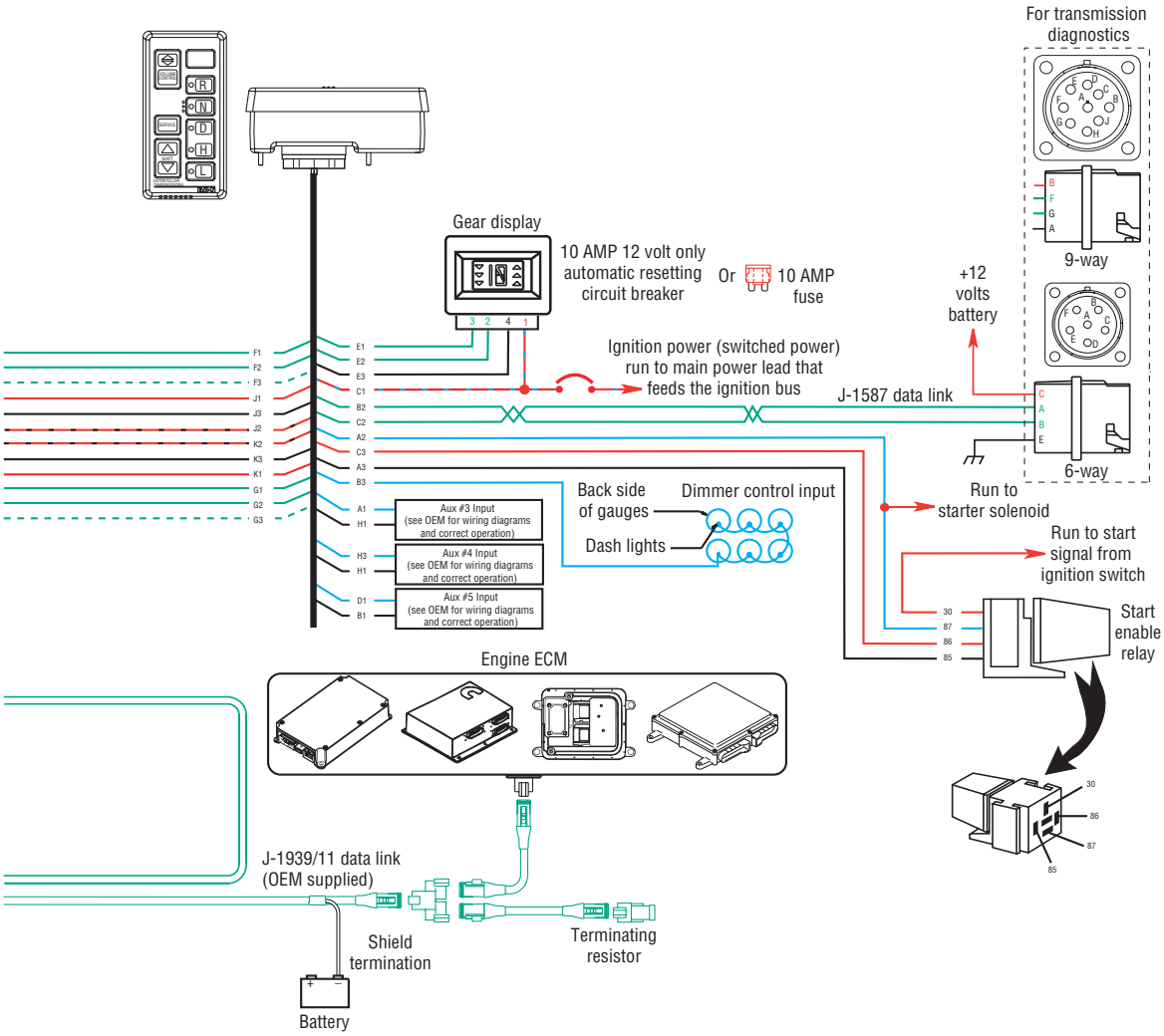

Shift Control ECU Legend

All OEM responsible wiring shown is "typical". Consult specific application.

(J1, K1, 30, Run to Solenoid) = +12 volt non-switched from battery

(J2, K2) = +12 volt switched from shift control to transmission controller

(C1) = +12 volt switched from ignition switch

(A2-87, B3, A1, H3, D1) = Signals into the ECU

(F1, F2, F3, G1, G2, G3, E1, E2, B2, C2, J-1939) = Communication from and to the ECU

(J3, K3, E3, H1, B1) = Signal returns, grounds, and general OEM wiring

(A3-85) = -12 volt relay source

(C3-86) = +12 volt relay source

18-Speed Wiring Diagram

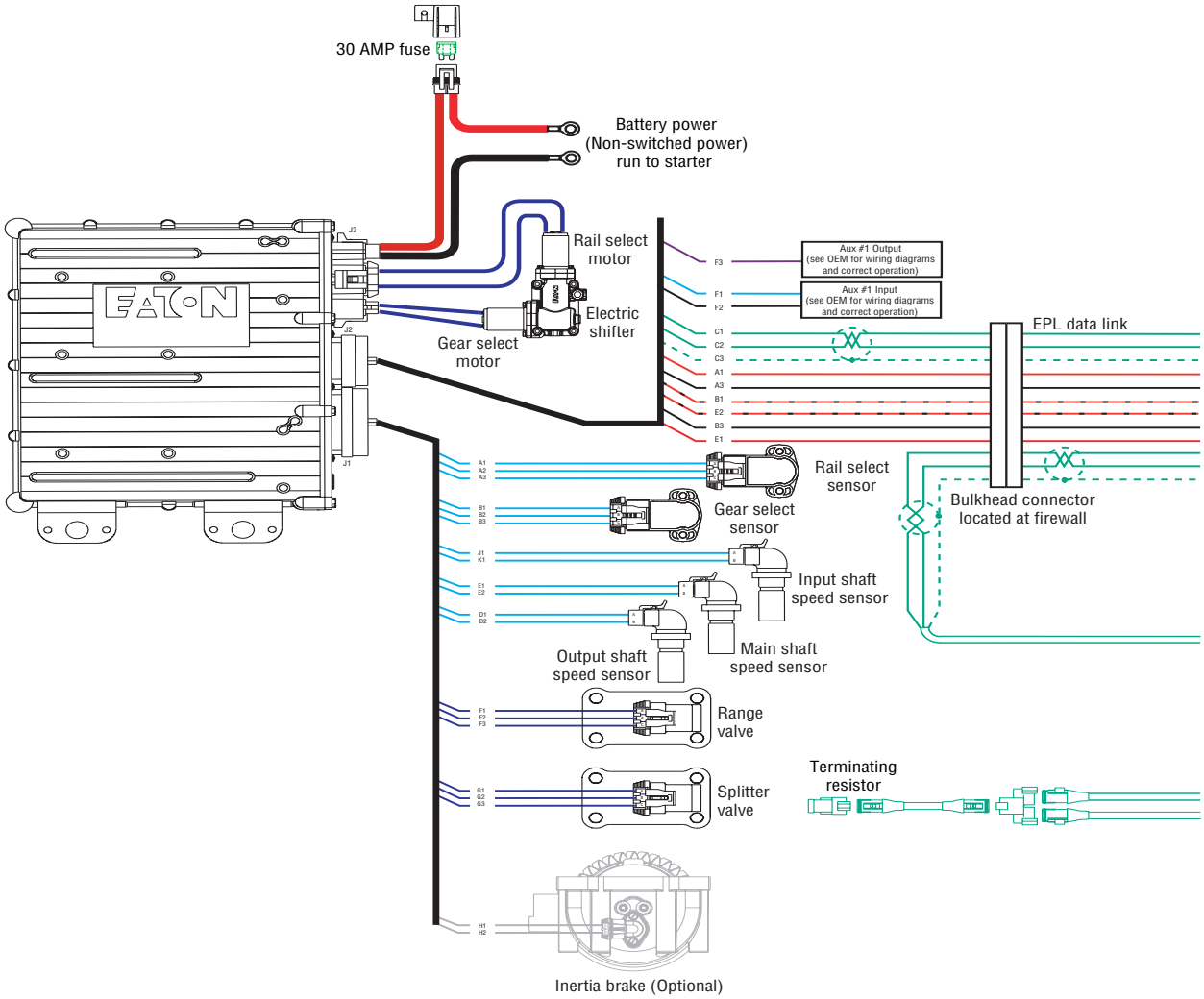

Trans ECU Legend

All OEM responsible wiring shown is "typical". Consult specific application.

(A1, E1) = +12 volt non-switched from battery

(B1, E2) = +12 volt switched from shift control to transmission controller

(F1) = Signals into the ECU

(C1, C2, C3, J-1939) = Communication from and to the ECU

(F2, A3, B3) = Signal returns, grounds, and general OEM wiring

(F3) = Aux output 1

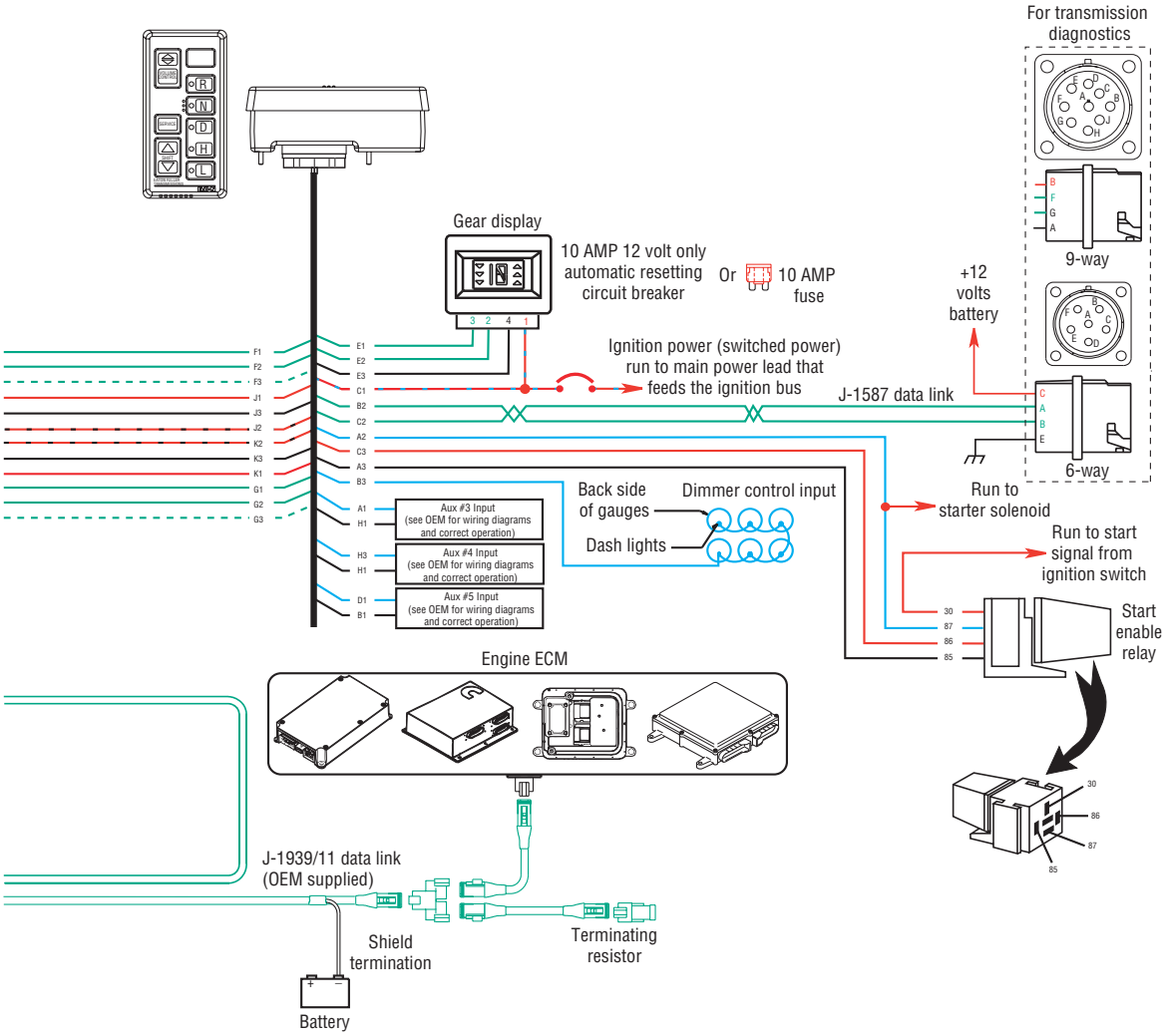

Shift Control ECU Legend

All OEM responsible wiring shown is "typical". Consult specific application.

(J1, K1, 30, Run to Solenoid) = +12 volt non-switched from battery

(J2, K2) = +12 volt switched from shift control to transmission controller

(C1) = +12 volt switched from ignition switch

(A2-87, B3, A1, H3, D1) = Signals into the ECU

(F1, F2, F3, G1, G2, G3, E1, E2, B2, C2, J-1939) = Communication from and to the ECU

(J3, K3, E3, H1, B1) = Signal returns, grounds, and general OEM wiring

(A3-85) = -12 volt relay source

(C3-86) = +12 volt relay source

Torque Specifications

Part	Torque
Flywheel capscrews	Follow engine manufacture's specifications
DM Clutch-to-Flywheel capscrews 7/16 x 2-1/4"	40 - 50 lbs-ft [54 - 68 Nm]
Transmission-to-Engine capscrews	
7/16-14	37 - 50 lbs-ft* [50 - 68 Nm]
3/8-16	25 - 32 lbs-ft* [34 - 43 Nm]
M10-35	26 - 35 lbs-ft* [35 - 47 Nm]
Output yoke nut:	
6-Speed	300 - 350 lbs-ft [407 - 475 Nm]
7, 10,18-Speed	450 - 500 lbs-ft [610 - 678 Nm]
PTO mounting capscrews:	
6-bolt opening	20 - 25 lbs-ft* [27 - 34 Nm]
8-bolt opening	50 - 65 lbs-ft* [68 - 88 Nm]
Reverse switch (9/16-18)	20 - 25 lbs-ft [27 - 34 Nm]
Neutral switch/cap (3/4-16)	20 - 25 lbs-ft [27 - 34 Nm]
ECU Connector Bolt	8 - 12 lbs-ft [10.8 - 16.2 Nm]
Lubricant fill plug	
6-Speed (3/4-NPT)	45 - 55 lbs-ft [61 - 75 Nm]
7, 10,18-speed (1¼-NPT)	60 - 75 lbs-ft [47 - 61 Nm]
Lifting bracket capscrew (3/8-16)	
Rear bearing cover capscrew: (3/8-16)	
6-Speed (1/2-20)	60 - 70 lbs-ft [81 - 95 Nm]
7, 10,18-Speed	35 - 45 lbs-ft [47 - 61 Nm]
Transmission nodal mount capscrews (3/4-10)	180 - 190 lbs-ft [244 - 258 Nm]
Packard Connector to Transmission ECU	25 - 28 lbs-in [2.82 - 3.16 Nm]
Packard Connector to Push Button Controller	7.1 - 13.3 lbs-in [0.8 to 1.5 Nm]

*Thread adhesive/sealant required

Connector Pin Descriptions

Transmission Controller 18-way (Vehicle Interface Connector)

18-WAY	DESCRIPTION	NOTES
A1	Batt 1	
A2	ATA +	
A3	GND 1	
B1	Trans batt 1	
B2	ATA -	
B3	GND 2	
C1	EPL +	
C2	EPL-	
C3	EPL shield	
D1	Aux speed 1 +	
D2	Aux speed 1 -	
D3	Aux input 2	Input, LO side
E1	Batt 2	
E2	Trans batt 2	
E3	Aux input 2	(Return)
F1	Aux input 1	Input, LO side
F2	Aux input 1	(Return)
F3	Aux output 1	Output, LO side driver

Connector Pin Descriptions

Shift Control 30-way connector

30-WAY	DESCRIPTION	NOTES
A1	Aux input/output 3	Input/output, LO side driver
A2	Start enable latch	
A3	Start enable relay -	
B1	Aux input 5	(Return)
B2	1587 +	
B3	Vdash	
C1	Ignition	
C2	1587 -	
C3	Start enable relay +	
D1	Aux input 5	Input, LO side
D2	Aux input 6	Input, LO side
D3	Aux output 3	Output, LO side driver
E1	Gear display clock	
E2	Gear display data	
E3	Gear display	(Return)
F1	EPL +	
F2	EPL -	
F3	EPL shield	
G1	1939 +	
G2	1939 -	
G3	1939 shield	
H1	Aux input 6	(Return)
H2	Aux output 2	Output, HI/LO side driver
H3	Aux input/output 4	Input/output, LO side driver
J1	Batt 1	
J2	Trans batt 1	
J3	GND 1	
K1	Batt 2	
K2	Trans batt 2	
K3	GND 2	

This page intentionally left blank.

National Institute for AUTOMOTIVE SERVICE EXCELLENCE

Roadranger®

For specing or service assistance, call 1-800-826-HELP (4357) 24 hours a day, 7 days a week (Mexico: 001-800-826-4357), for more time on the road. Or visit our web site at www.roadranger.com.

Roadranger: Eaton, Dana and other trusted partners providing the best products and services in the industry, ensuring more time on the road.

Eaton Corporation • Truck Components Operations • P.O. Box 4013 • Kalamazoo, MI 49003 • U.S.A. • www.roadranger.com